MANUAL
TLS1 2.03

IDENTIFICATION DATA OF THE MANUFACTURER

KOLVER S.r.l.
VIA M. CORNER, 19/21
36016 THIENE (VI) ITALIA

IDENTIFICATION DATA OF THE PRODUCT

MODEL:	TLS1/CAR281	TLS1/CAR282	TLS1/CAR501	TLS1/CAR502	TLS1/LINAR1	TLS1/LINAR2	TLS1/LINART	SAR/XYZ/TLS1
CODE:	010663/TLS1	010664/TLS1	010665/TLS1	010666/TLS1	010681/TLS1	010682/TLS1	010683/TLS1	010690/XYZ-TLS1

TECHNICAL DATA OF THE PRODUCT

SUPPLY VOLTAGE: 12V DC
DIMENSIONS: 170 x 100 x 35 mm
WEIGHT: 0,5 Kg

DECLARATION OF CONFORMITY

CE

KOLVER S.r.l. declare that this unit for TLS1 arm is in conformity with the following standards and other normative documents: 2006/42/CE, LVD 2014/35/UE, EMCD 2014/30/UE, EN 62841-2-2:2014, EN 62841-1: 2015, EN 60204-1, EN 61000-6-2, EN 61000-6-4.
.It is also in conformity with RoHS III normative (2011/65/UE and following 2015/863).

Name: Giovanni Colasante
Position: General Manager
Person authorized to compile the technical file in Kolver

Thiene, January 1st 2022

Giovanni Colasante

Code	Model	Max Torque	Dimensions mm		Min distance between screws at the max arm extension
			Min	Max	
010663/TLS1	TLS1/CAR281	25 Nm	500	950	9 mm
010664/TLS1	TLS1/CAR282	25 Nm	750	1670	15 mm
010665/TLS1	TLS1/CAR501	50 Nm	500	950	9 mm
010666/TLS1	TLS1/CAR502	50 Nm	750	1670	15 mm
010681/TLS1	TLS1/LINAR1	25 Nm	272	653	6 mm
010682/TLS1	TLS1/LINAR2	50 Nm	272	653	6 mm
010683/TLS1	TLS1/LINART	25 Nm	114	740	7 mm
010690/XYZ-TLS1	SAR/XYZ/TLS1	15 Nm	692x376 (XY), 885 Z		5 mm
To be connected to:					
260004/1	Cable TLS1 x EDU2AE + EDU2AE/TOP + EDU1BL/SG				
260003/1	Cable TLS1 x EDU1FR/SG				
260004/KDU	Cable TLS1 x KDU-1A, no program selection KDU-1A to TLS1				
260014/KDU	Cable TLS1 x KDU-1A with program selection KDU-1A to TLS1				
260004/KDUNT	Cable TLS1 x KDU-NT, no program selection KDU-NT to TLS1				

INTRODUCTION

The main function of the TLS1 controller is to enable and disable the screwdriver depending on its spatial position.
It is used to enforce a desired spatial pattern for the screws to be tightened.
Additionally, the TLS1 provides acoustic and visual feedback of the result of each tightening operation and can provide optional controls to rework a screw, acknowledge an error and the completion of the assembly operation.
Because the TLS1 uses position sensors, the product to be assembled must be positioned consistently with respect to the torque reaction arm. A product fixture is the most common way of achieving this.

When used with a Kolver torque controller, the **TLS1** automatically advances to the next programmed screw position (via the "Screw OK" signal). With **EDU2AE** and **KDU-1A** controllers, the TLS1 automatically synchronizes with the program selected on the torque controller, if using the appropriate cable and settings.

It is also possible to use the **TLS1** controller with a **PLC**. It is imperative to make the correct wiring connections, as improper wiring may damage the TLS1. Please refer to the **PLC INSTRUCTIONS** in this manual and contact Kolver for further assistance.

Finally, it is also possible to use the TLS1 controller with non-Kolver torque controllers. At minimum, the torque controller needs to be capable of supplying a "Screw OK" signal (to advance the TLS1 to the next position) and receive a "disable screwdriver" (stop motor) signal (to allow the TLS1 to enable and disable the screwdriver). Please refer to the I/O instructions in this manual and contact Kolver for further assistance.

NOTE: When using a **PLC** or a non-Kolver torque controller, it is imperative to make the correct connections, as improper wiring may damage the TLS1 and/or your torque controller.
Kolver will always provide free technical assistance and support with setting up your TLS1 controller with a PLC or non-Kolver torque controller.
However, damage done to the TLS1 controller due to incorrect I/O wiring may not be covered under warranty.

USAGE

Turn the unit on through the ON/OFF button on the front panel.

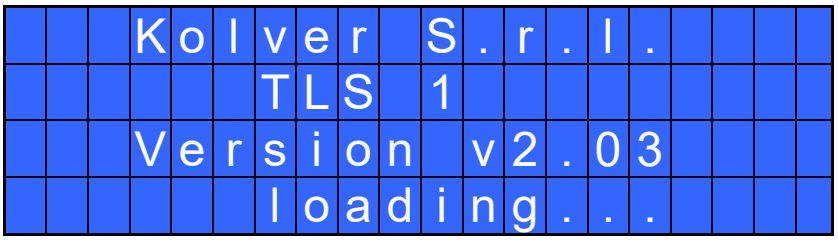

After booting, the system will automatically switch to the main screen (figure below).
Main screen:

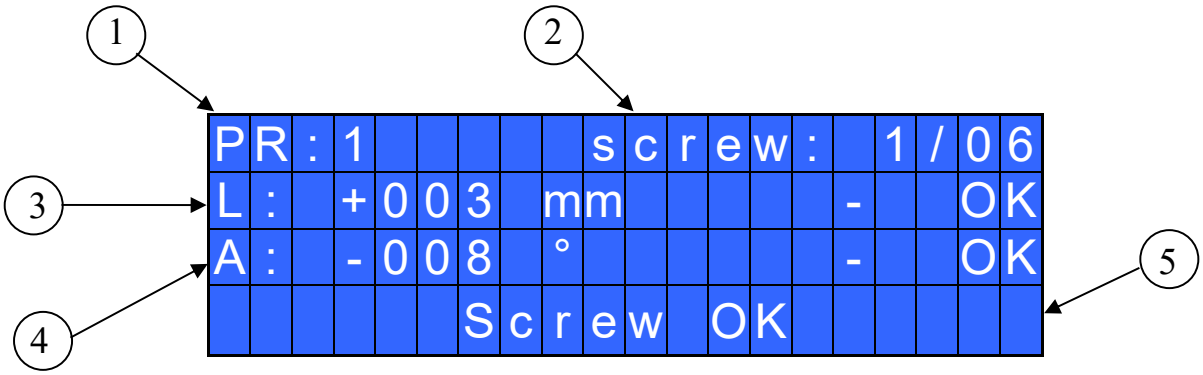

1- Program number
2- Screw count: Screws OK / Total screws in this program.
3- Real time position from sensor 1. CAR/LINAR1/2/SAR: millimeters or inches. LINART: degrees.
4- Real time position from sensor 2. SAR: millimeters or inches. LINART: degrees.
5- Status bar (Screw OK, Screw NOK and End of Program).

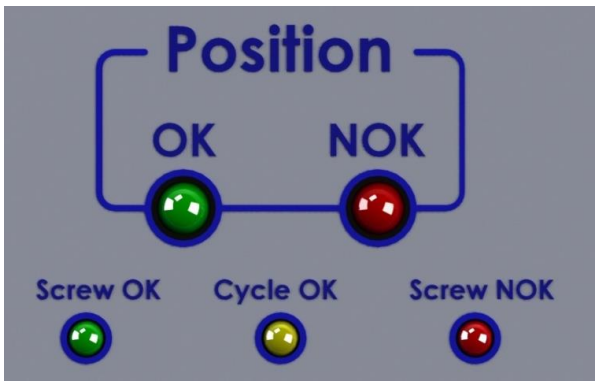

OK GREEN LED: the screwdriver arm is on the target screw position, within the set tolerance
NOK RED LED: the screwdriver arm is not on target screw position
Screw OK GREEN LED: the screwing/unscrewing has been done correctly (signal from screwdriver or PLC)
Cycle OK YELLOW LED: the program has been achieved correctly (signal from screwdriver or PLC).
Screw NOK RED LED: the screwing/unscrewing has been done incorrectly (signal from screwdriver or PLC)

MAIN MENU

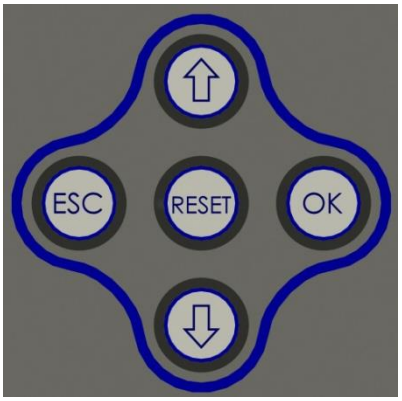

To enter the menu press **ESC** for 2 seconds.

Select the line by pressing ⇧ or ⇩ then press **OK** (the symbol ➔ will turn into ➡). Press ⇧ or ⇩ to select the required value and then confirm through **OK** (or **ESC** if you don't want to save the value).
Repeat these operations for all the parameters you wish to set and then push **ESC** to return to the main screen.

```
-----MENU--PR:1-----
OK change  ESC quit
➔Program setting
 Options
```

Program Setting: It indicates the menu section where you can set or modify the position of the screws.

Options: It indicates the menu section where you can set or modify the programs by remote, the password, the unit and the language.

PROGRAM MENU

```
-----MENU--PR:1-----
OK change  Esc quit
➔1)Program number:  1
 2)Set position
```

1) Program number: you can select the desired program from 1 to 8.

2) Set position: you can set the position of the screw (max 35 screws per program). Place the screwdriver on the screw and the position will be displayed. Press OK to save the position and move to the next screw. If the pattern is complete, press ESC (after pressing OK for the last screw) to exit.

```
-----MENU--PR:1-----
 3)Program info
➔4)Length Tol.: ± 10
 5)Angle Tol.:± 1.0
```

3) Program info: to display the positions of the screws already saved (see point 2).

4) Length Tol. (Length Tolerance): you can set a tolerance value (± 1 mm) of length measurement. This range can be set from 1 to 200 mm (resolution 1 mm). Press OK to confirm.

In case of LINART, this parameter will be ANGLE1 and it will be the tolerance of the Angle1 (see point 5) referring to the Sensor.

5) Angle Tol.: you can set a tolerance value (± 0.5 °) the measure of the angle. The range can be set from 0.5 ° to 100.0°. Press OK to confirm.

In case of LINART, this parameter will be ANGLE2 and it will be the tolerance of the Sensor.

The "tolerance" is the amount of deviation from the programmed positions that is allowed without disabling the screwdriver
Increase the tolerance settings to make the TLS1 position enforcement more forgiving, for example if your product fixture is slightly loose.

```
-----MENU--PR:1-----
 6)Reset:        prg
→7)Press OK:     off
 8)Press ESC:    off
```

6) Reset: to enable the reset button to decrease the screw count.
PRG = you resets the screw count to zero. Screw = decreases the screw count by 1.

7) Press OK: after a program end, if OFF, the TLS1 unit resets automatically.
If ON, press OK every program end.

8) Press ESC: after an error signal, if ON, the TLS1 unit asks to press ESC to acknowledge the error and enable the screwdriver.
If OFF, the error is automatically reset when you restart the tightening.

The Reset, OK, and ESC signals can also be sent from the torque controller or PLC via P3.

OPTIONS MENU

```
----MENU-OPTIONS----
OK  change   ESC  quit
→1)Unit model:KDUCER
 2)Arm model:    CAR
```

1) **Unit Model**: Select the unit connected to the TLS1 arm. Models available: Kducer and EDU.

Note: The K-DUCER unit has PNP input signals and requires an external 10 KOhm pull-up resistor between pin 1 and pin 2 of the P1 connector. The cables for K-DUCER controllers (260004/KDU, 260014/KDU, 260004/KDUNT) already include this resistor. so that the stop motor can work correctly.

2) **Arm Model**: Select the arm model connected to the TLS1 arm. Models available: CAR, LINAR1 e LINART.
3) **Select. progr**: Select the program from outside through the connector P3 (see I/O Connectors).
4) **Change password**: You can modify the password.

```
----MENU-OPTIONS----
 3)Select progr:  off
→4)Change password
 5)Password:      off
```

1) **Password**: If ON, you will be asked for the password to enter the menu. Otherwise select OFF. ATTENTION: Password is only asked to enter the menu for the first time after switching the unit on. The default password is: 0000.

2) **Unit:**You can choose between the following units of the length measurements mm (millimeter) and in (inch).

```
----MENU-OPTIONS----
 6)Unit:          mm
→7)Language:      EN
 8)Sensor position
```

3) **Language:** This option allows to choose among 6 languages: English, Italian, German, Spanish, French and Portuguese.

4) **Sensor position:** to see in real time on the display the position of the sensors.

INTERPRETATION OF ACOUSTIC SIGNALS

The TLS1 unit emits sounds which help you understand if the screwing has been carried out correctly or not. When the torque is reached meeting all the parameters set, the TLS1 unit receives the signal from the EDU control unit connected and utters a 0.5 sec beep as confirmation. Other two beeps when the end of the program has been reached.
Instead in case of a wrong screwing, the TLS1 unit receives the error signal from the EDU/KDU/PLC and you will hear three beeps.

SETTING OF THE POSITION SENSOR (LINAR arm only)

After selecting the arm model you are going to use (Options Menu, point 1), you have to check the correct position of the sensor:

1. Enter in Options Menu, go to point 7 (Sensor Position)
2. Position the arm at its min extension.
3. On the main screen, check if the lenght (L) is 0mm
4. In case the value is different than 0, loosen the screws (see the picture below) and move horizontally the sensor until the value is 0.
5. Once found the correct position, tighten the screws previously losen and exit from the menu.

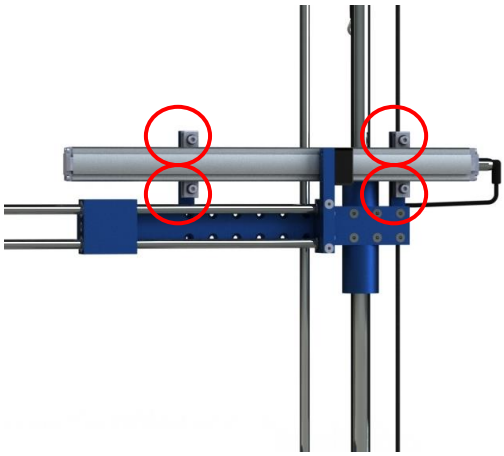

PLC INSTRUCTIONS

On the P1 I/O connector:

- Supply 24 VDC constantly to Pin 1 and connect the negative (ground) terminal to Pin 5. This power source should be the same as the one that powers the output signals of your PLC.
- Do not connect anything to Pin 2
- Connect an output signal from your PLC to Pin 3 to signal "Screw OK" to the TLS1, to advance the screw count by 1 and allow the TLS1 controller to switch to the next programmed screw position. The TLS1 controller detects a **rising edge** on this signal. You can use a pulse for this signal, just make sure the pulse high duration is at least 500ms long.
- Make sure the ground of your output signals **and** of the power source going to Pin 1 are connected to Pin 5
- Optional: connect another output signal to Pin 4, to signal "Screw NOK". This signal turns on the corresponding red LED on the TLS1 controller, and activates the "Press ESC" functionality if enabled. This signal is not required for basic functionality.

On the P2 I/O connector:

- These signals are input signals for your PLC, they are powered by the power source supplied to connector P1 Pin 1 and they are triggered by the TLS1.
- Connect the negative (ground) terminal of the input terminal block of your PLC to Pin 7
- Connect an input signal of your PLC to Pin 1 "POSITION NOK", indicating to your PLC that the screwdriver is not in the correct position for the current screw.
- Optional: connect another input signal of your PLC to Pin 2 "POSITION OK", indicating to your PLC that the screwdriver is in the correct position.
- Optional: connect another input signal of your PLC to Pin 3 "PROGRAM END". This signal activates when the "Screw OK" signal is received for the last screw of the current program.
- Pin 4 and Pin 5 are redundant and not required. They simply return the signal supplier to connector P1 Pin 4 and P1 Pin 5.
- Do not connect anything to Pin 6
- Make sure to connect the appropriate ground/negative to Pin 7

On the P3 I/O connector:

- These signals are output signals from your PLC, to be powered by the same 24 VDC power source supplied to connector P1 Pin 1, and they trigger program selection and other functions on the TLS1.
- If you only use one program in the TLS1, you do not need to connect anything to P3
- Connect the negative (ground) terminal of the output terminal block of your PLC to Pin 12
- For program selection: connect an output signal from your PLC to Pin 1-8 to select the desired program number in the TLS1. The TLS1 option "select progr" must be ON. The output corresponding to the desired program must always remain ON while the program is in use. Only one output on Pin 1 to Pin 8 should be active at any time (unless using special version 2.03.02 of the TLS1 controller, in which case you may use binary logic to select programs 1 through 40).
- Optional: connect **relay output signals** from your PLC to Pin 9-10-11 to use the corresponding Reset/ESC/OK functions, if enabled on the TLS1 program. These signals are NOT active signals, they are relay contacts. The TLS1 controller detects a **path to ground** on these signals. If you apply +24VDC to pins 9…12, you will irreversibly damage the board.

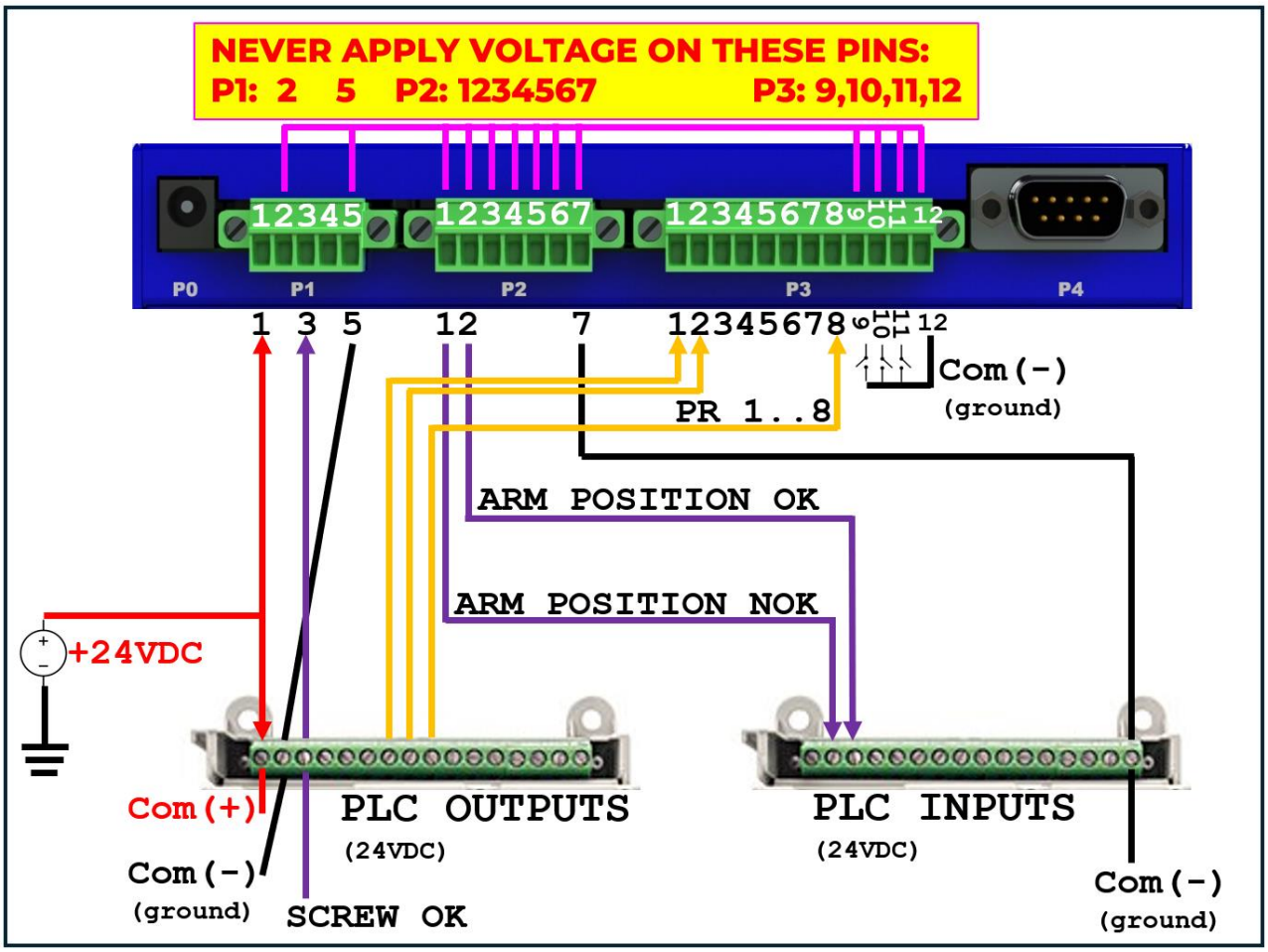
NEVER APPLY VOLTAGE ON THESE PINS:
P1: 2 5 P2: 1234567 P3: 9,10,11,12
12345
1234567
12345678
P0
P1
P2
P3
P4
1 3 5
12
7
12345678
Com(-)
(ground)
PR 1..8
ARM POSITION OK
ARM POSITION NOK
+24VDC
Com(+)
Com(-)
(ground)
SCREW OK
PLC OUTPUTS
(24VDC)
PLC INPUTS
(24VDC)
Com(-)
(ground)

I/O CONNECTIONS

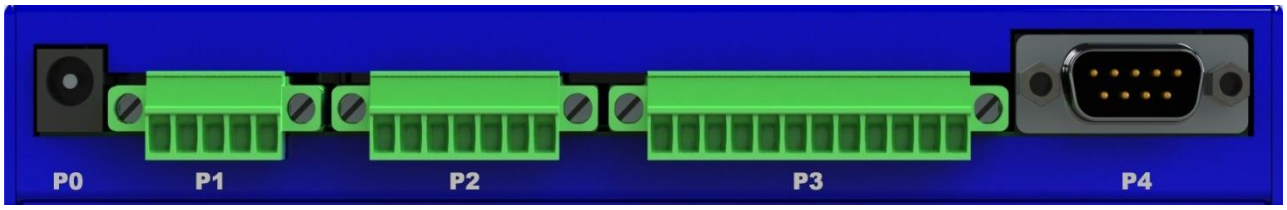

- **CONNECTOR P1 – 5 pin**

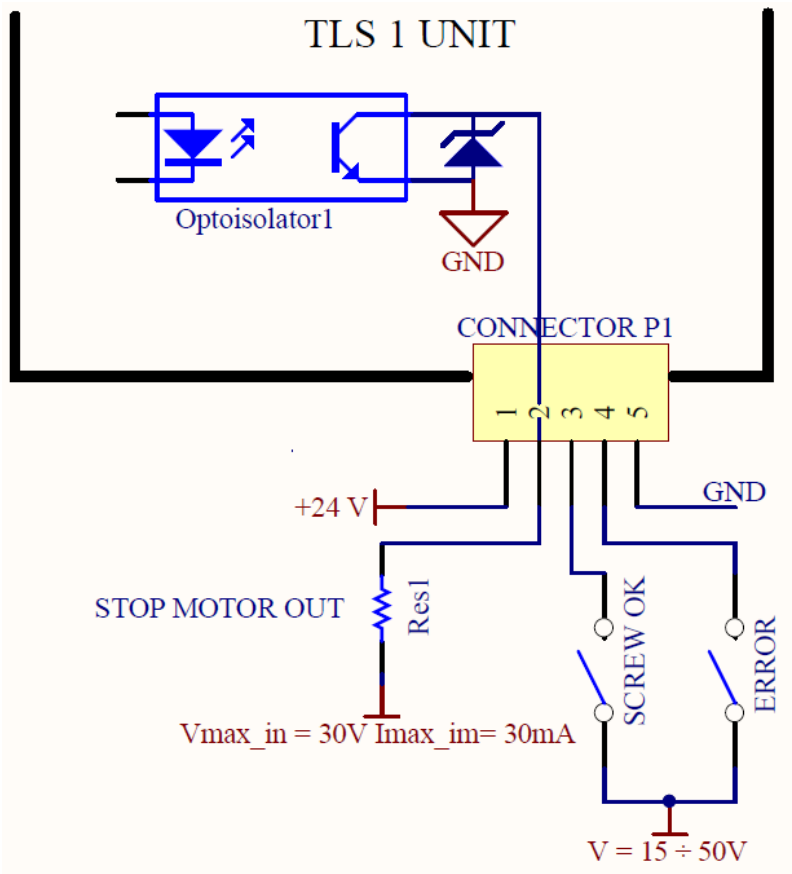

PIN	NAME	FUNCTION
1	+24V SIGNAL	INPUT: this pin gives TLS1 the right tension for leds and output signals. The maximum tension must be 24V 400mA.
2	STOP MOTOR OUT	OUTPUT: special output for sending the "disable screwdriver" signal to Kolver controllers when the arm is out of position. DO NOT USE WITH PLC (use the POSITION NOK active signal on P2)
3	SCREW OK	INPUT: NPN Screw OK signal. Whenever this signal is received by the TLS1, it increases by one the number of screws done. It also activates the Screw OK led. The TLS1 detects a rising edge on this signal. Must remain high at least 500ms.
4	ERROR	INPUT: NPN Error signal. It also activates the Screw NOK led.
5	COM0VDC	Common pin between the control unit and the TLS1. This pin is connected to 0VDC to the ground.

- **CONNECTOR P2 – 7 pin**

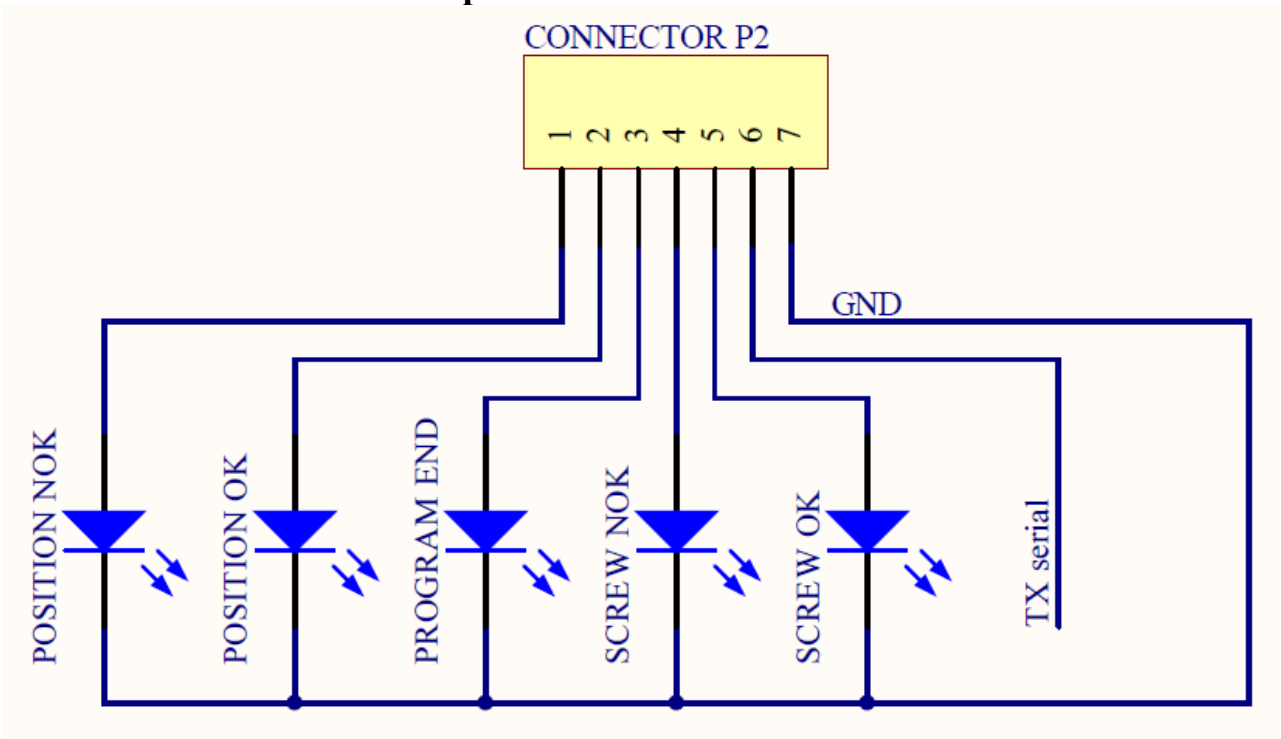

PIN	NAME	FUNCTION
		OUTPUT
1	POSITION NOK	The screwdriver is NOT located on the correct screw.
2	POSITION OK	The screwdriver is located on the correct screw.
3	PROGRAM END	The required number of screws in the program have been completed.
4	SCREW NOK	This signal re-routes the signal from P1 - 4.
5	SCREW OK	This signal re-routes the signal from P1 - 3.
6	Seriale TX	Serial transmission RS232 9600 baud 8 data bits no parity 1 stop bit
7	COM0VDC	Common ground

ATTENTION: Output signals from TLS1 unit are protected from an appropriate circuit. Overload of the available signals (> 400 mA) or short circuit will result in the stop of the unit. To re-activate signals, it is necessary to switch off the unit for 5-6 seconds, check connections and output loads then switch the unit on.

- **CONNECTOR P3**

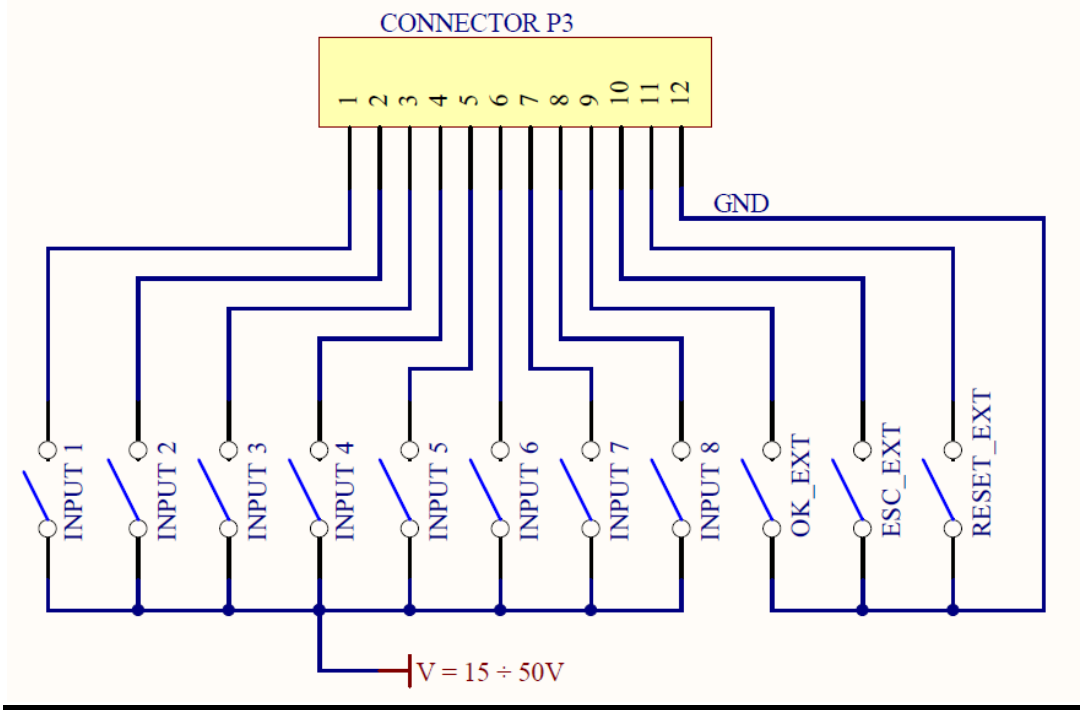

PIN	NAME	FUNCTION
		INPUT
1	INPUT 1	Pin to select the Program 1
2	INPUT 2	Pin to select the Program 2
3	INPUT 3	Pin to select the Program 3
4	INPUT 4	Pin to select the Program 4
5	INPUT 5	Pin to select the Program 5
6	INPUT 6	Pin to select the Program 6
7	INPUT 7	Pin to select the Program 7
8	INPUT 8	Pin to select the Program 8
9	OK	Remote OK key (RELAY CONTACT, DO NOT APPLY VOLTAGE)
10	ESC	Remote ESC key (RELAY CONTACT, DO NOT APPLY VOLTAGE)
11	RESET	Remote RESET key (RELAY CONTACT, DO NOT APPLY VOLTAGE)
12	COM0VDC	Inputs 1-8: supply +24 V between the respective pin of the desired signal of this connector and this pin (0V common). Inputs 9-10-11: switch a path to ground to activate the signal

- **CONNECTOR P4 (M DB9 connector)**

PIN	NAME	FUNCTION
1	SENSOR1	Reading of linear sensor1 (LINAR1 arm)
2	+12V	Pin for sensor1
6	SENSOR2	Reading of linear sensor2 or angular1 (CAR or LINART arms).
7	+5 V	Pin for sensor2 and 3.
8	SENSOR3	Reading of linear angular2 (CAR-LINAR1-LINART arms).
9	GND	Common pin for Positioning Arm sensors.

SERIAL PRINT:

On Connector P3, there is a RS232 pin for serial transmission:
P3: PIN 6 = TX, PIN 7 = GND
You can print on PC (for example through Hyper Terminal programs) or printer (for example our printer PRNTR1) the results of each screw done.
The transmission characteristics are:
9600 (bits per second), 8 (data bits), n (no parity), 1 (bits stop 1).

The print string is the following:

RESULT	PROGRAM NUMBER	SCREW	NOTICE

Result = screwing result: correct or incorrect.

OK = the screwing has been correctly performed. The control unit will give out a beep sound of 0.5 sec.

NOK = the screwing has NOT been correctly performed. In this case, the unit will give out 2 beep sounds and the red led will light up.

PR: Program number **=** it indicates the running program.

Screw: Number of screws = number of tightened screws/total number of screws.

Notice = in case of program end, it prints "Program End", in case of sequence end, it prints "*Seq. end*" or it indicates the type of error (see paragraph: trouble shooting).

Example of serial print:

```
OK   PR:1 Screws: 1/4
OK   PR:1 Screws: 2/4
NOK  PR:1 Screws: 2/4
NOK  PR:1 Screws: 2/4
OK   PR:1 Screws: 3/4
OK   PR:1 Screws: 4/4 Prog_end
OK   PR:1 Screws: 1/4
```

EXPLODED VIEW

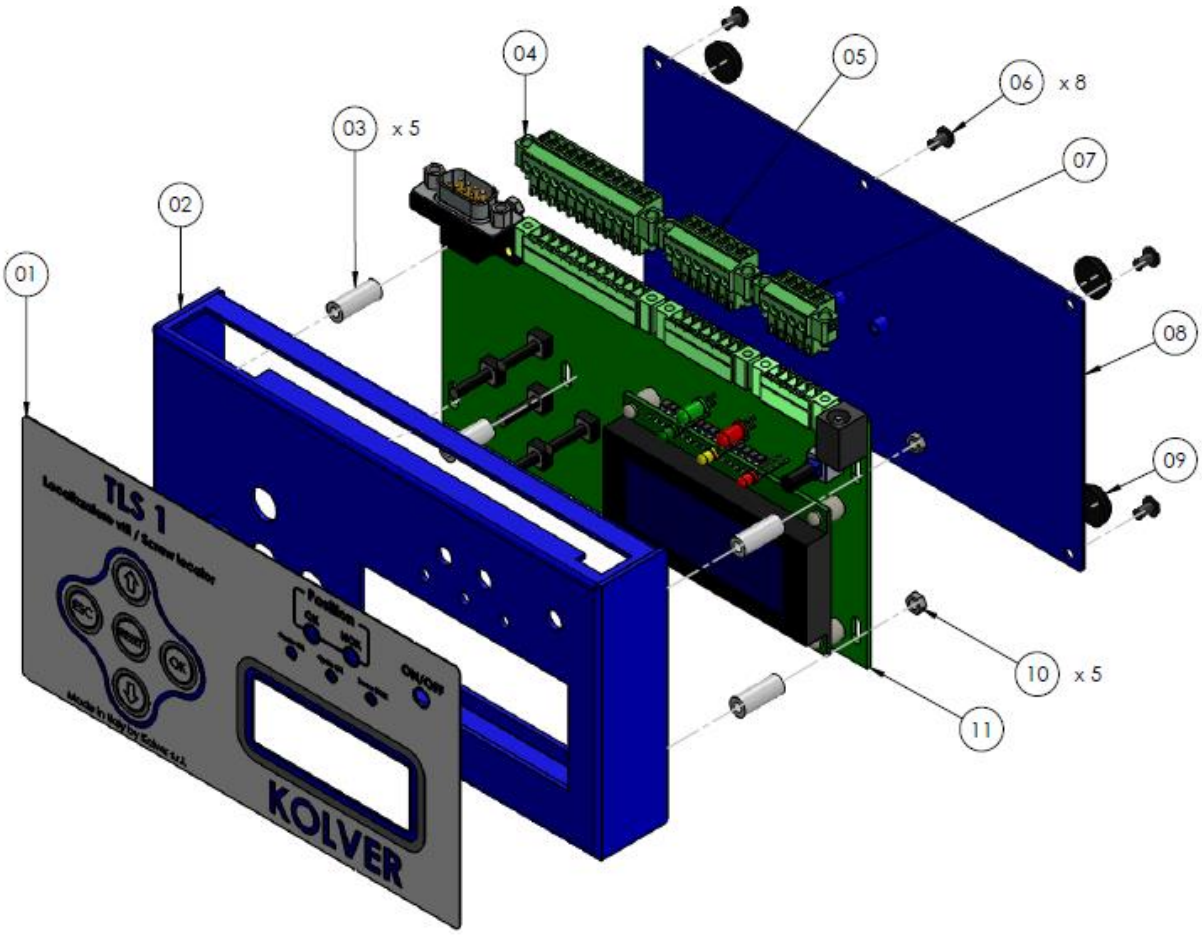

SPARE PARTS

Position	Description	Quantity	Code
1	Membrane TLS 1	1	896001
2	Upper panel TLS 1	1	896002
3	Spacer 15mm dest4.8mm	5	890004/T
4	Connector 12 poli spacing 3,50 – F	1	890009
5	Connector F 7 pin spacing 3,50 – F	1	891030
6	Screw 3x5	8	872443
7	Connector I/O 5 pin spacing 3,50 – F	1	891029
8	Base TLS1	1	896003
9	Plastic support	4	800016
10	Nut M3 zn-white	5	800056
11	Main board TLS 1	1	896000
	Power supply 12V	1	241009/N

GUARANTEE

1. This KOLVER product is guaranteed against defective workmanship or materials, for a maximum period of 12 months following the date of purchase from KOLVER, provided that its usage is limited to single shift operation throughout that period. If the usage rate exceeds of single shift operation, the guarantee period shall be reduced on a prorata basis.
2. If, during the guarantee period, the product appears to be defective in workmanship or materials, it should be returned to KOLVER or its distributors, transport prepaied, together with a short description of the alleged defect. KOLVER shall, at its sole discretion, arrange to repair or replace free of charge such items.
3. This guarantee does not cover repair or replacement required as a consequence of products which have been abused, misused or modified, or which have been repaired using not original KOLVER spare parts or by not authorized service personnel.
4. KOLVER accepts no claim for labour or other expenditure made upon defective products.
5. Any direct, incidental or consequential damages whatsoever arising from any defect are expressly excluded.
6. This guarantee replaces all other guarantees, or conditions, expressed or implied, regarding the quality, the marketability or the fitness for any particular purpose.
7. No one, whether an agent, servant or employee of KOLVER, is authorized to add to or modify the terms of this limited guarantee in any way. However it's possible to extend the warranty with an extra cost. Further information at kolver@kolver.it.