TORQUE TESTER
MINI K

OPERATOR'S HANDBOOK



KOLVER S.r.l - via dell'elettronica, 14/16 - 36016 THIENE - ITALY
kolver@kolver.it - www.kolver.it

Vers. 140323 rev 2

1. APPLICATIONS

Recommended for all static and dynamic calibration of electric and pneumatic screwdrivers, wrenches and power tools.

2. FEATURES

Model	Code	Torque Range Nm	Accuracy	Transducer
MINI K1/S	021402/S	0,1 – 1	± 2 cNm	Built-in
MINI K5/S	021403/S	0,3 – 5	± 4 cNm	Built-in
MINI K20/S	021404/S	0,5 – 20	± 10 cNm	Built-in
MINI KEF1	021405/F1	0,1 – 1	± 2 cNm	MINI KE + KT1
MINI KEF5	021405/F5	0,3 – 5	± 4 cNm	MINI KE + KT5
MINI KEF20	021405/F20	0,5 – 20	± 10 cNm	MINI KE + KT20
MINI KEF50	021405/F50	2 – 50	± 20 cNm	MINI KE + KT50
MINI KEF100	021405/F100	5 – 100	± 40 cNm	MINI KE + KT100
MINI KE/5/S	021405/5/S	0,5 – 5	± 4 cNm	MINI KE + KTE5
MINI KE/25/S	021405/25/S	2 – 25	±12,5 cNm	MINI KE + KTE25
MINI KE/50/S	021405/50/S	5 – 50	± 20 cNm	MINI KE + KTE50
MINI KE/100/S	021405/100/S	10 – 100	± 40 cNm	MINI KE + KTE100

- Built-in transducer to measure on joint simulator (MINI K.../S)
- External transducer to measure on joint simulator (MINI KEF…)
- External rotary transducer to measure the real torque being applied from the tool (MINI KE/…/S)
- Three units of torque measurements: Nm, Kgf.cm, lbf.in.
- Manual and auto reset functions to clear displayed values
- Battery powered (9V)
- AC adapter cord (12V, 500mA, 6W, external +, cylindrical jack, hole 2,5 mm and 5,5mm external)
- Correction factor (FATC): to connect more ext. transducers on the same tester
- Mini USB to connect to PC and to communicate to Torque Analyzer
- Certificate of calibration
- Automatic shut down

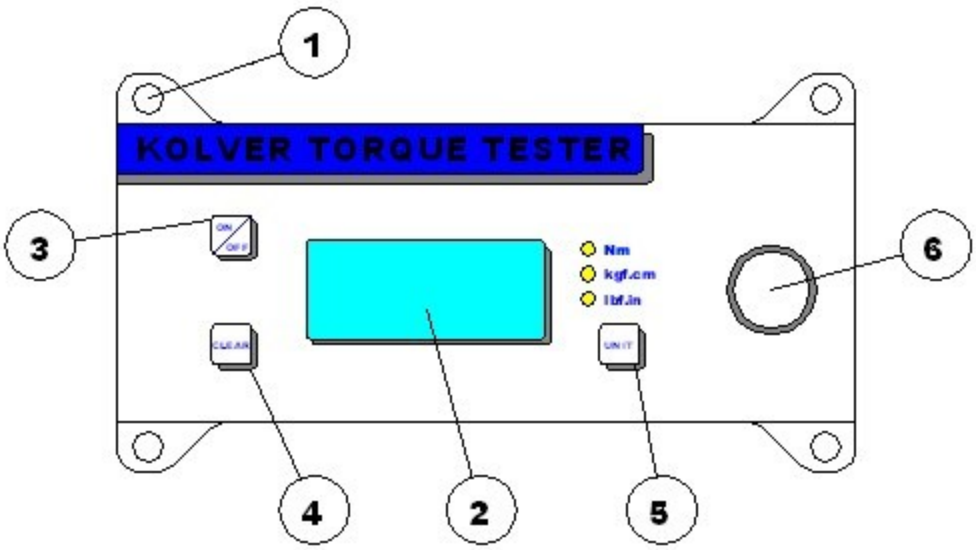

3. DESCRIPTION

1. Mounting holes
2. Display 4 digit / 8 lines
3. “ON/OFF” key : press for 3 seconds to switch tester on or off
4. “CLEAR” key : press to reset the displayed value
5. “UNIT” key : press to select the unit of torque measurements
6. Internal transducer or port for external transducer

4. MOUNTING

It is strongly recommended securing the tester through slots “1” to a workbench before operating. Immobilizing the tester when checking torque values over 1 Nm is critical for the safety the operator as well as for the accuracy of torque measurements during operation.

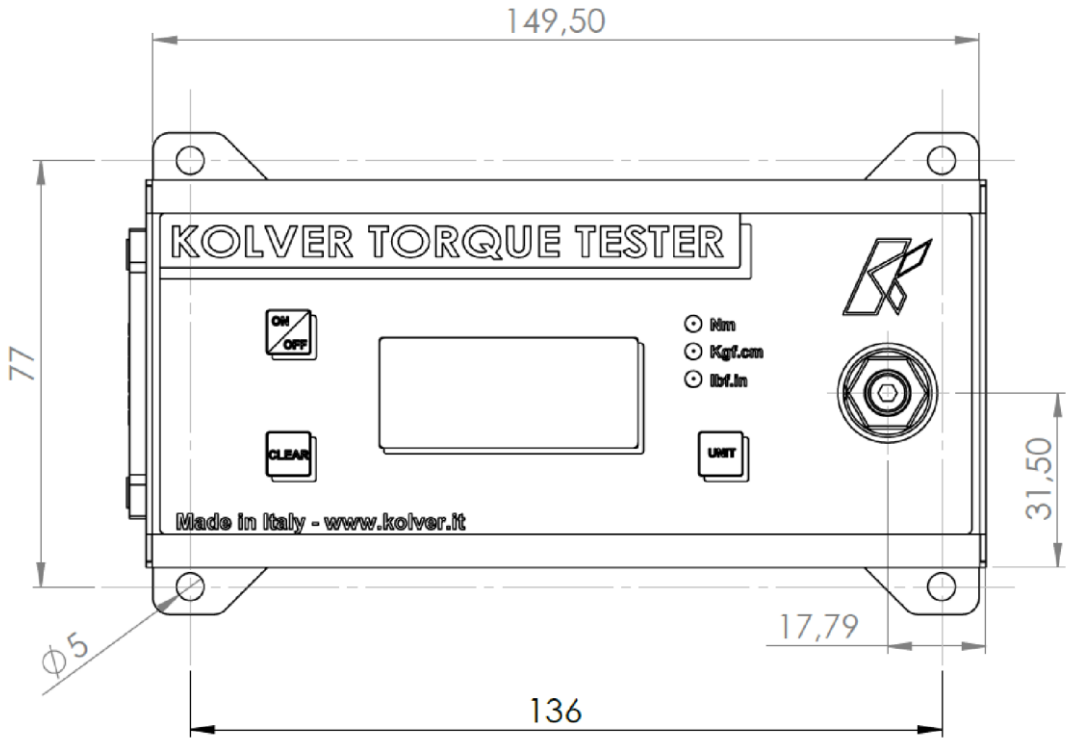

5. JOINT SIMULATORS

The Joint Simulator (JS) consists of a screw compressing a series of washers enclosed in a case with hex female head for proper fit to any Kolver torque tester. The head of the joint simulator can be supplied with different attachment depending on the model used which allows the screwdriver to be connected to the joint simulator.
Since a joint simulator cannot duplicate actual joints, the torque values displayed on the minik may vary from the actual torque that a screwdriver will apply to the actual assembly.
Minik1 is supplied with a built-in joint simulator to increase low torque measurements accuracy.

Joint simulators available:

Code	Model	Screwdriver side attachment	Torque tester side attachment	Compatibile torque tester model	Included with
240620	Hex13/M1,6	M1,6 Female thread	Female hex 13mm	MiniK1 K1 MINIKEF1	on request
240621	Hex13/M2	M2 Female thread			
240622	Hex13/M3	M3 Female thread			
240640	Hex13 – 1/4“ M4	Male hex 1/4“	Female hex 13mm	MiniK1 K1 MINIKEF1	MINIKEF1
240600	Hex13 – 1/4“ M6	Male hex 1/4“	Female hex 13mm	MiniK5 MINIKEF5 K5	MiniK5 MINIKEF5 K5
240800	Hex13 – 1/4“ M8	Male hex 1/4“	Female hex 13mm	Mini K20 MINIKEF20 K20	Mini K20 MINIKEF20 K20
240901	3/8” M12	Female Sq 3/8”	Male Sq 3/8”	MINIKEF50	MINIKEF50

240902	1/2” M12	Female Sq 1/2”	Male Sq 1/2”	MINIKEF100	MINIKEF100

NB. We recommend to regrease the test joint every 1000 cycles.

6. STARTING AND OPERATING THE TESTER

1. Immobilize the tester when checking torque values over 1 Nm. This is critical for the safety the operator as well as for the accuracy of torque measurements during operation.
2. Switch the tester on pushing the ON/OFF key.

If used only with battery check its status. If the tester does not switch on or the display is not clear enough, please replace the battery. When used it the AC adapter, this will disable the battery. The battery is not rechargeable. The display will show the main screen:



3. Insert the joint simulator into its 13mm hex seat and make sure the screw is in its upper position (if not run the driver anticlockwise to unscrew it). The tester is ready for a measuring cycle.

In minik1, only unscrew before measuring.

4. Run the joint simulator screw all the way down until it stops and read the torque value on the display. Run the screw up to be ready for the next cycle.
5. Press the “ON/ESC” key for 3 seconds to switch the tester off. The tester features a built-in auto shut off mode function to save power when not in use. If there is no activity for 3 minutes, such as key press or no torque input, the tester will shut down. To restore power press the “ON/ESC” key for 3 seconds

NB. Before starting, always check that the screen displays 0.000. Instead push CLEAR.

7. SELECTING THE UNIT

***MEASURING UNIT*:** Nm, kgf.cm and lbf.in

To change unit: press **Unit** key until the desired unit has been selected.
Each unit is indicated by a LED of different color: red for Nm, green for kgf.cm and yellow for lbf.in.

8. SELECTING MANUAL OR AUTO RESET

The flow chart below shows how to select **Manual** or **Auto Reset**.
Sens, Cal and **Fatc** functions (sensitivity, calibration and correction factor) can be modified only by authorized personnel.

When you select **rst “OFF”**: you need to push “CLEAR” to remove readings from the display and reset all values to zero.
When you select **rst “ON”**: any new measure will replace the previous one without resetting the value to zero.
When you select **rst “traC”**: the display will show the value measured in real time. Certain digits will flicker even under constant torque load, depending on the torque level and the transducer model, due to natural noise in the real-time measurement.

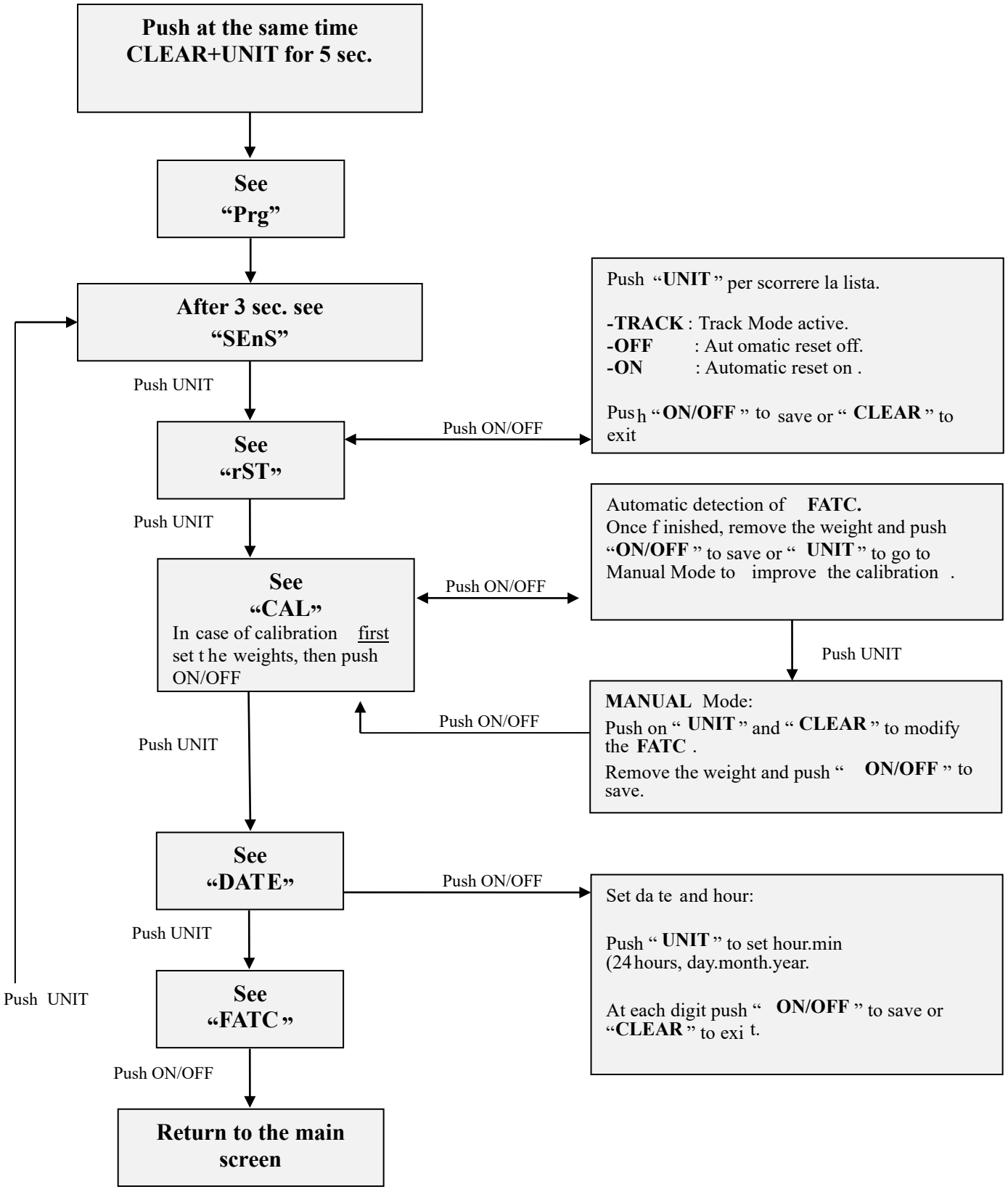
Push at the same time
CLEAR+UNIT for 5 sec.
See
“Prg”
After 3 sec. see
“SEnS”
Push UNIT
See
“rST”
Push ON/OFF
Push “UNIT” per scorrere la lista.
-TRACK : Track Mode active.
-OFF : Aut omatic reset off.
-ON : Automatic reset on .
Push “ON/OFF” to save or “CLEAR” to exit
Push UNIT
See
“CAL”
In case of calibration first set the weights, then push ON/OFF
Push ON/OFF
Automatic detection of FATC.
Once finished, remove the weight and push “ON/OFF” to save or “UNIT” to go to Manual Mode to improve the calibration .
Push UNIT
MANUAL Mode:
Push on “UNIT” and “CLEAR” to modify the FATC .
Remove the weight and push “ON/OFF” to save.
Push ON/OFF
Push UNIT
See
“DATE”
Push ON/OFF
Set date and hour:
Push “UNIT” to set hour.min
(24 hours, day.month.year.
At each digit push “ON/OFF” to save or “CLEAR” to exit.
Push UNIT
See
“FATC”
Push UNIT
Push ON/OFF
Return to the main screen

9. EXTERNAL TRANSDUCER for miniKe

The MINI KEF and MINI KE/S torque testers consist of a MINI KE torque reader and an external static or rotary transducer. The static transducer combined with a joint simulator allows you to check the torque measured by the screwdriver and calibrate it according to your needs. The rotary transducer is the ideal tool for verifying the real torque applied by the screwdriver directly on the screw (and not on a joint simulator). Thanks to the modification of the FATC (correction factor) and the SENS (full scale value of the connected transducer), it is possible to calibrate several external transducers in a single MINI KE reader (see Programming Menu).
Rotary and non rotary transducers for lower or higher torque ranges available on request. The minike can read torque up to 500 Nm.

MINI KE READER



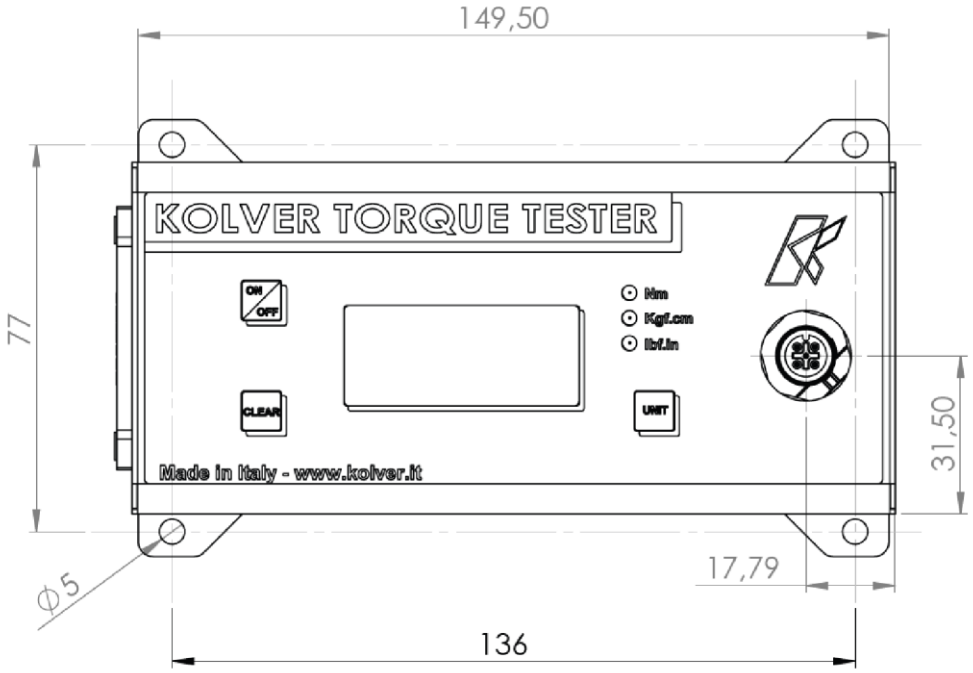

Example of MINI KE + KT series external cell + joint simulator

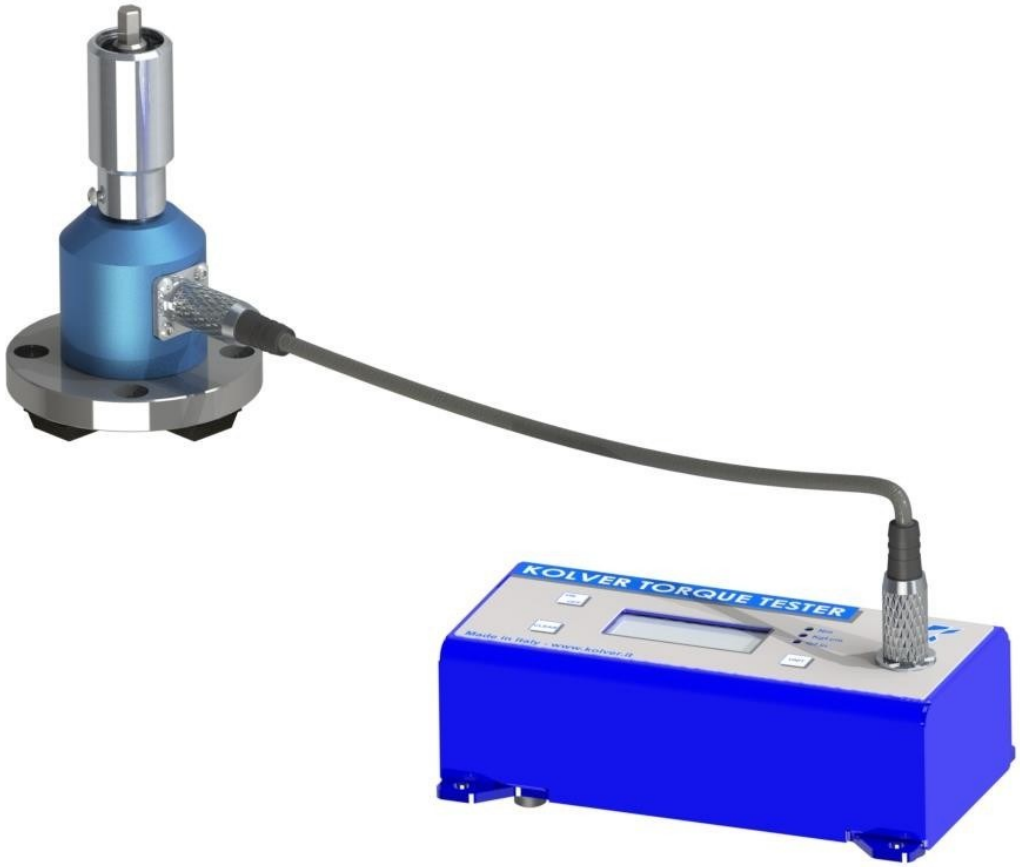

Example of MINI KE + KTE series external cell + joint simulator



KT SERIES TRANSDUCERS

Code	Model	Torque range	Attachment
023001	KT1	0,05-1	Female hex 13mm
023005	KT5	0,3-5	Female hex 13mm
023020	KT20	0,5-20	Female hex 13mm
023050	KT50	2-50	Female Sq 3/8”
023100	KT100	5-100	Female Sq 1/2”

KT1 – KT5 – KT20

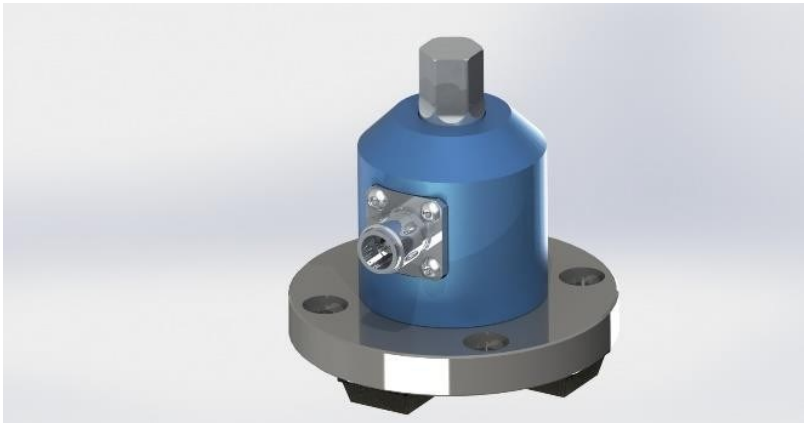

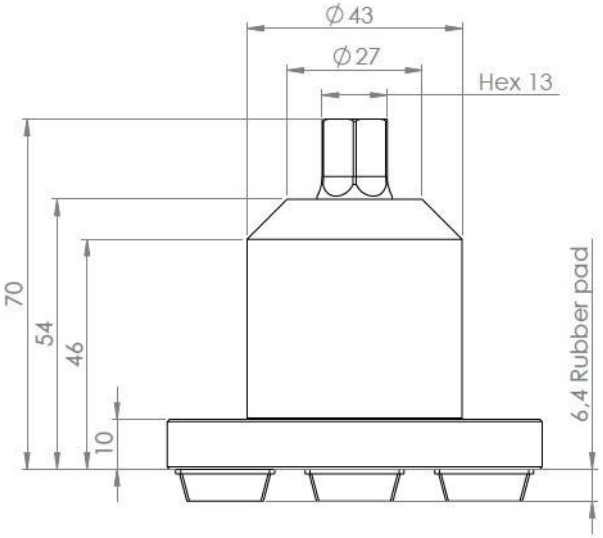

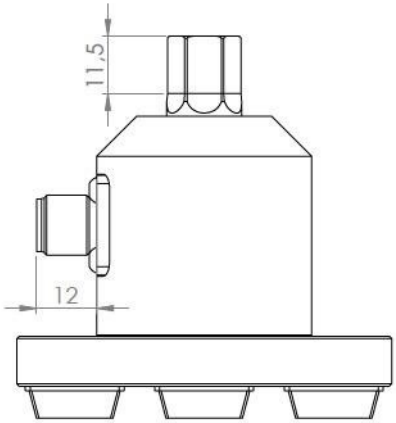

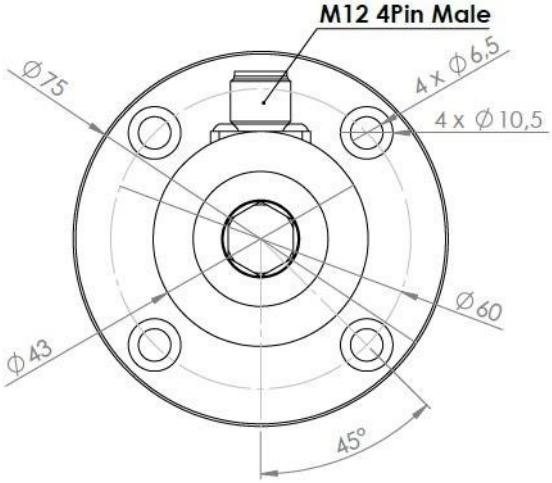

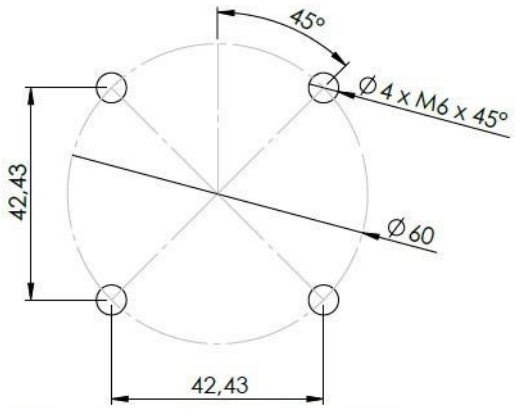

Dima di foratura per fissaggio
Drilling plate for fixing

KT50

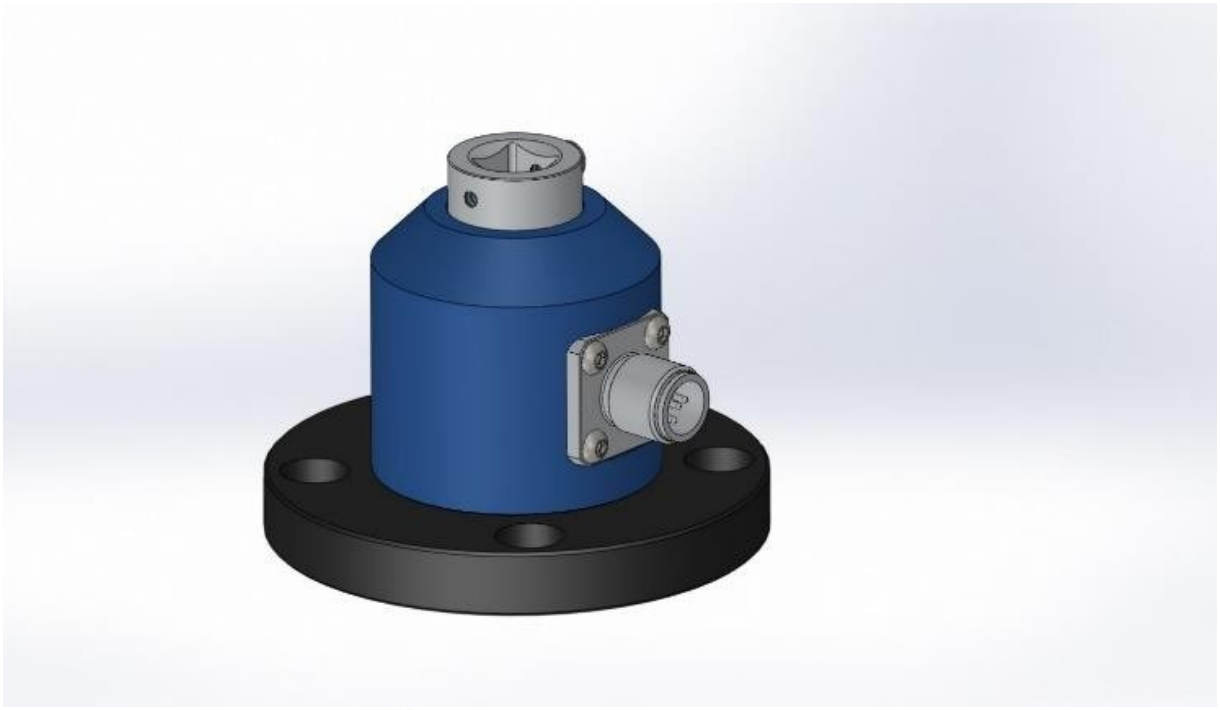

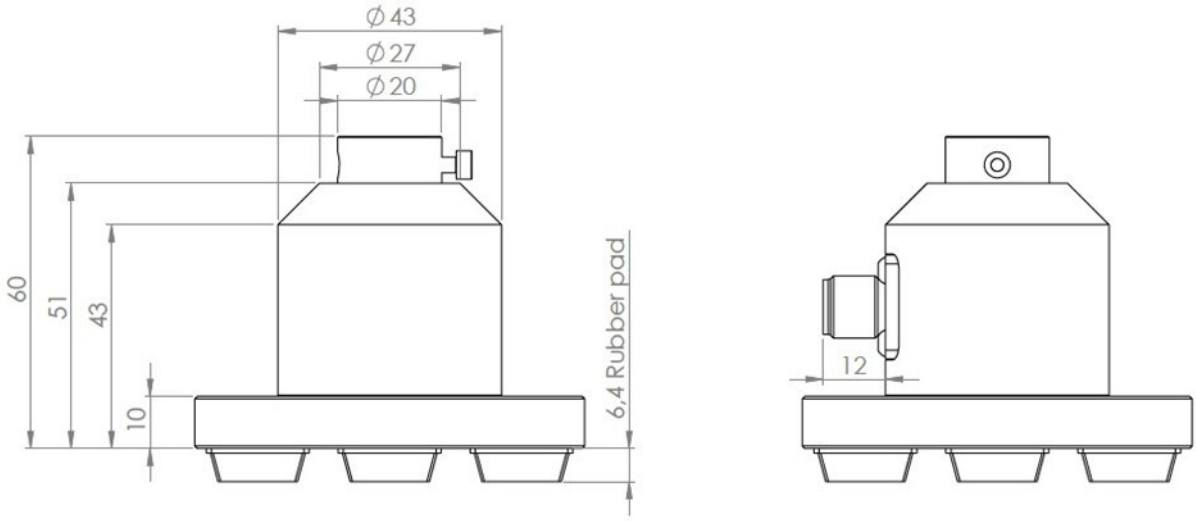

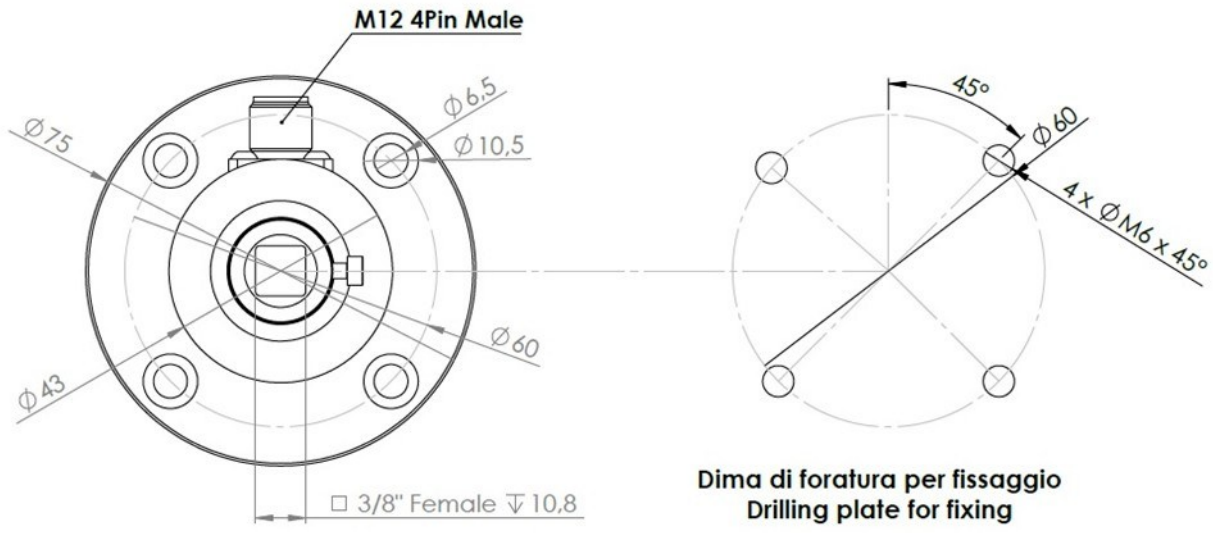

Dima di foratura per fissaggio
Drilling plate for fixing

KT100

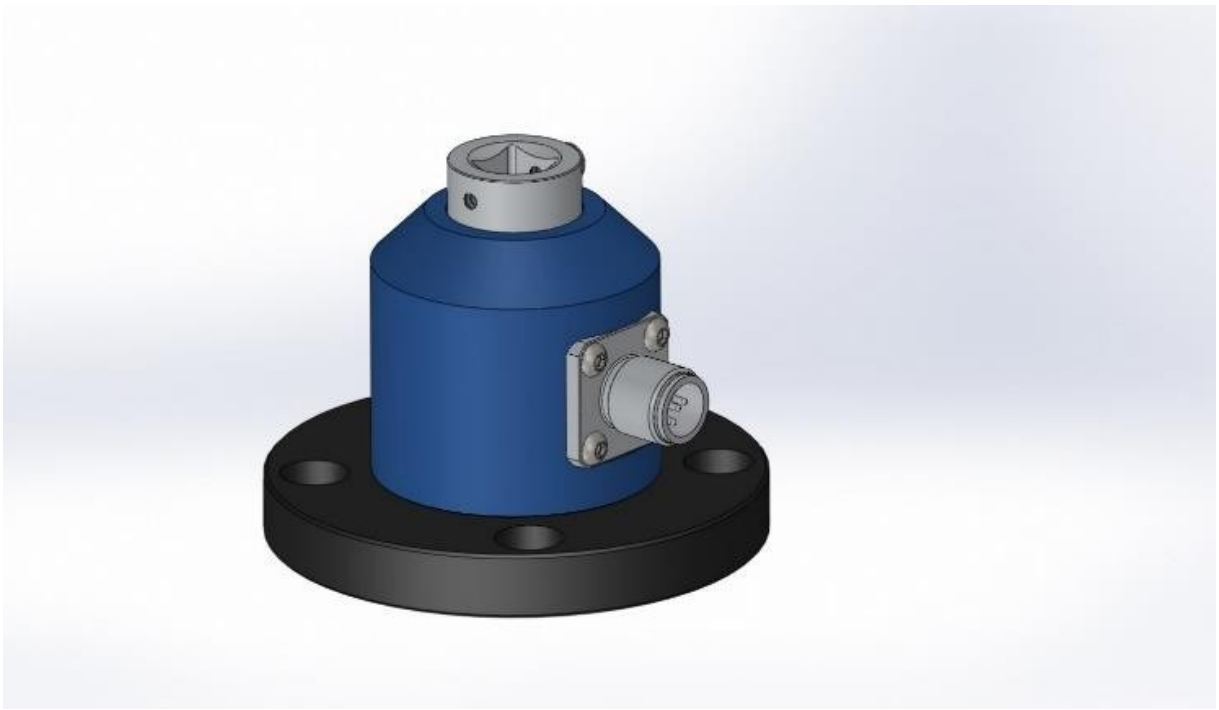

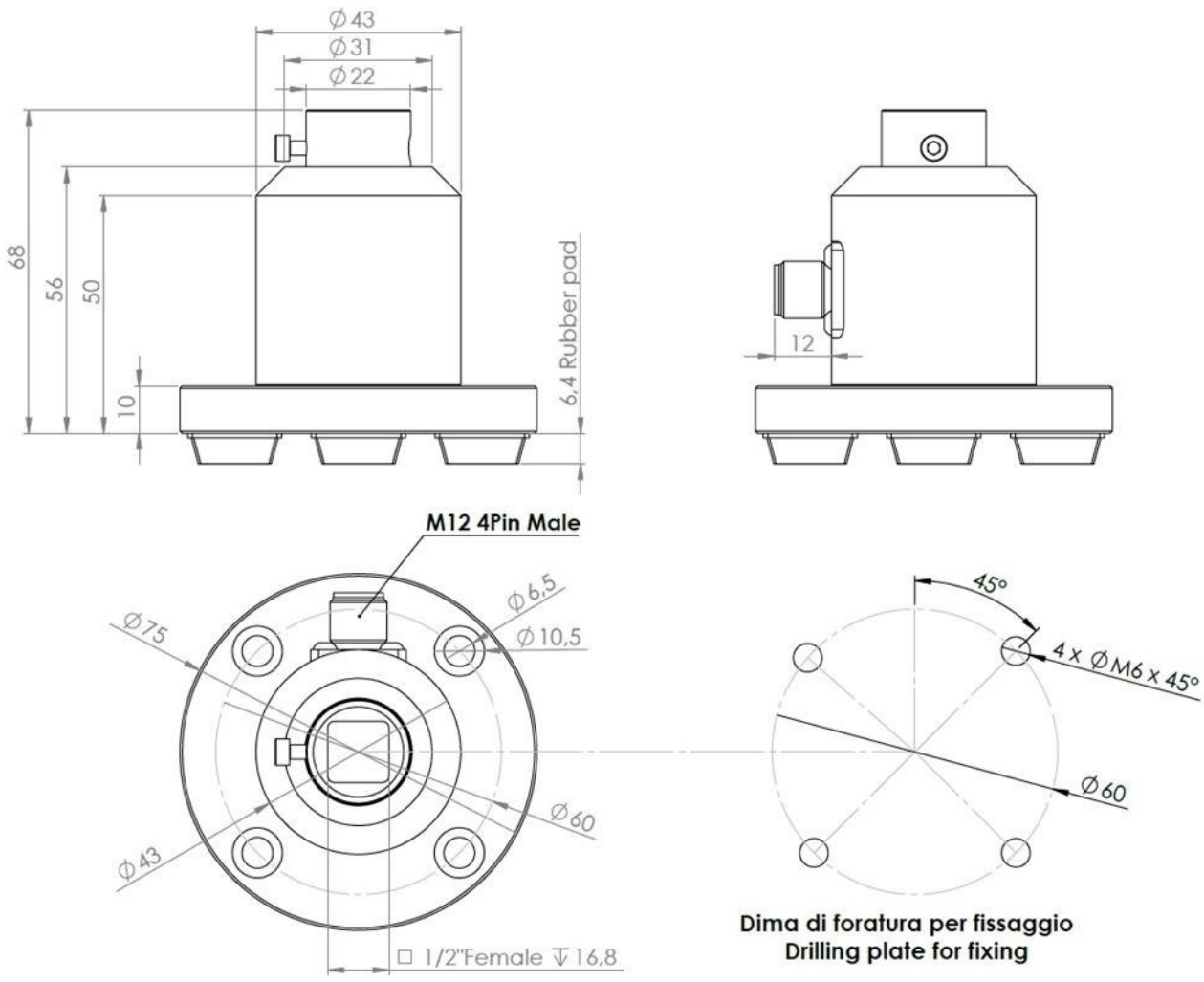

Vers. 140323 rev 2

ROTARY TRANSDUCERS

Code	Model	Torque range	Attachment
022405	KTE5	0,5-5	Maschio-femmina esagonale 1 / 4 “
022425	KTE25	2-25	Maschio-femmina esagonale 1 / 4 “
022450	KTE50	5-50	Maschio-femmina quadro 3 / 8 “
022411	KTE100	10-100	Maschio-femmina quadro 1 / 2 “

KTE5-KTE25 MODELS

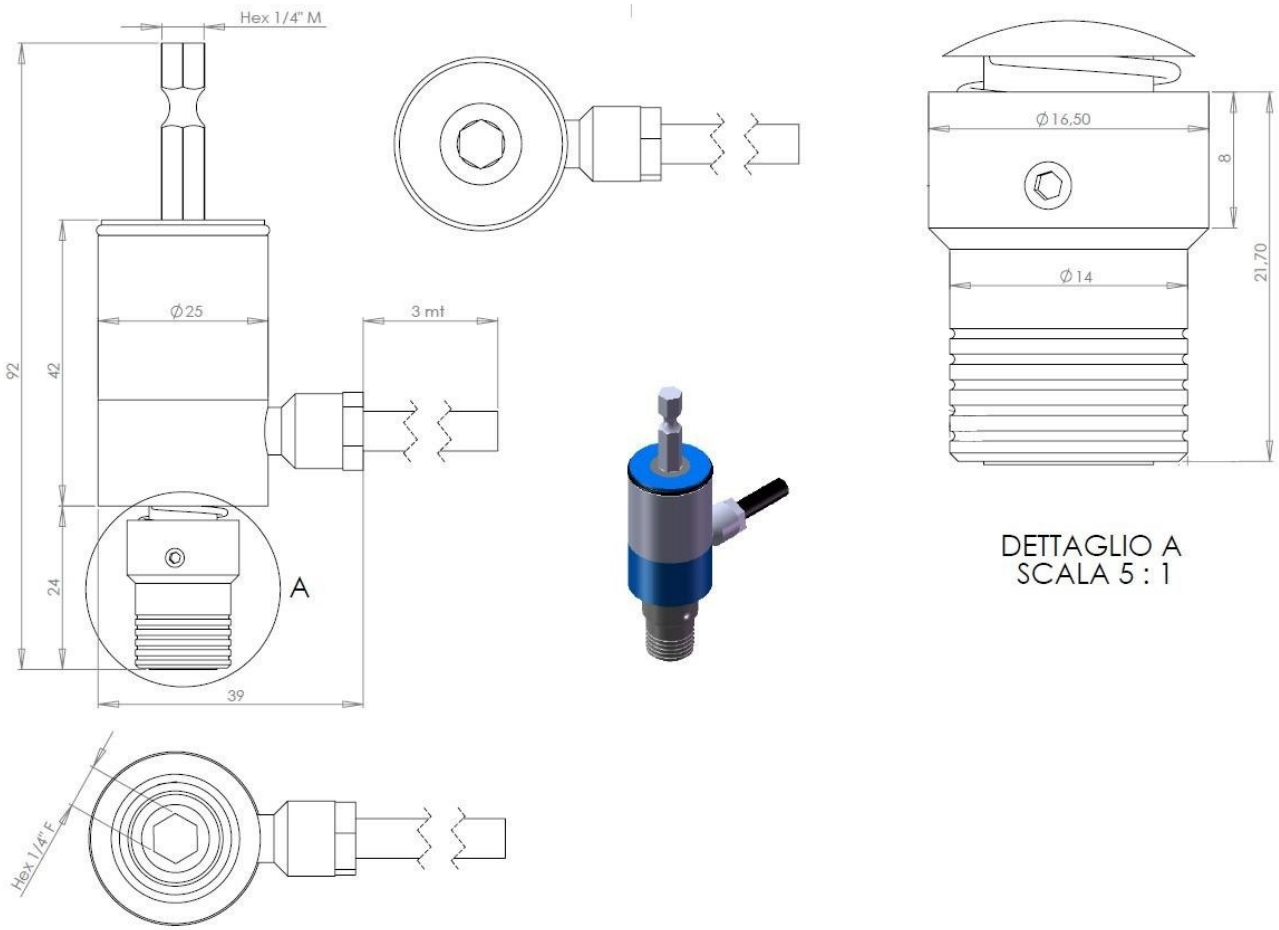

KTE50 MODEL

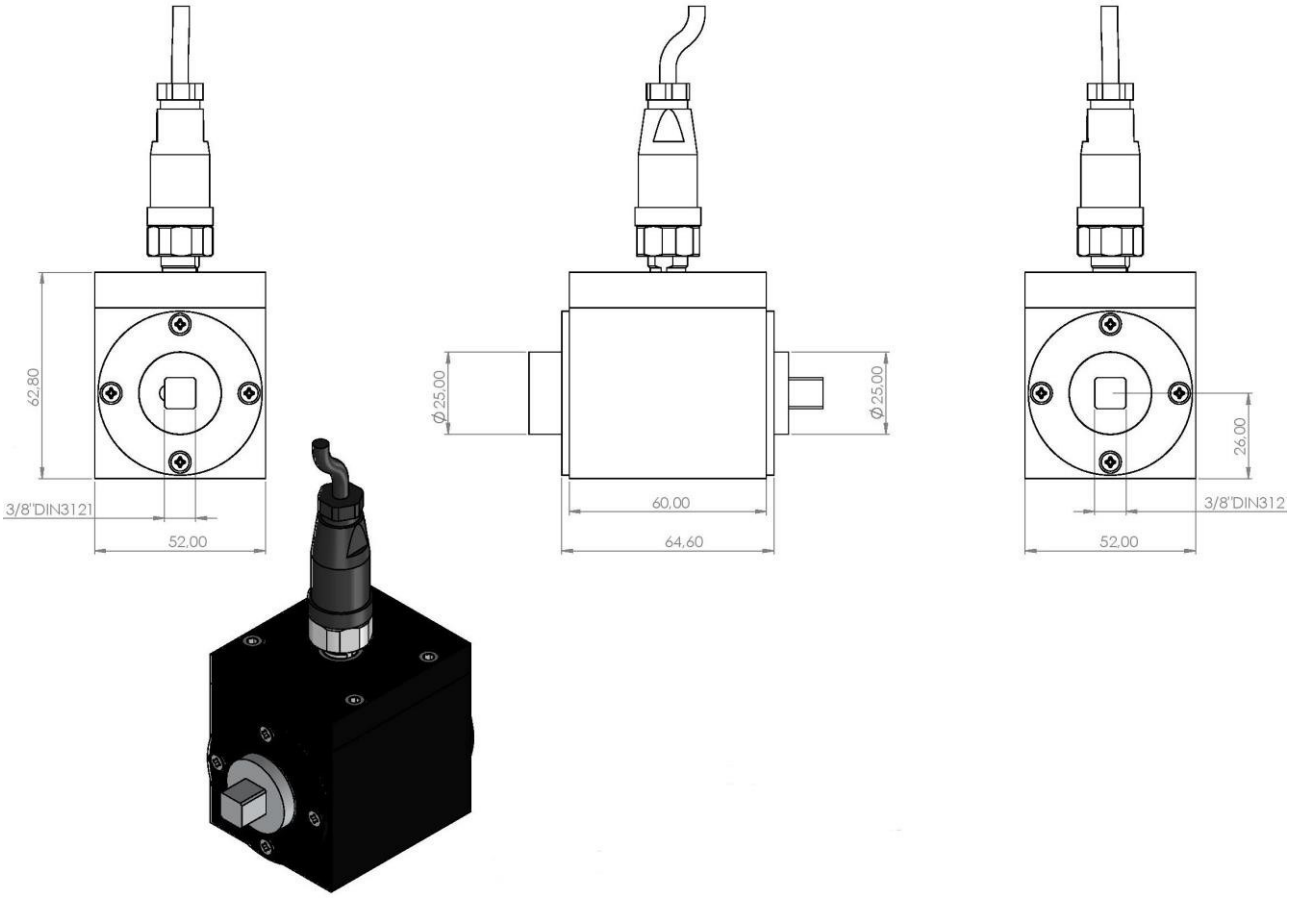

KTE100 MODEL

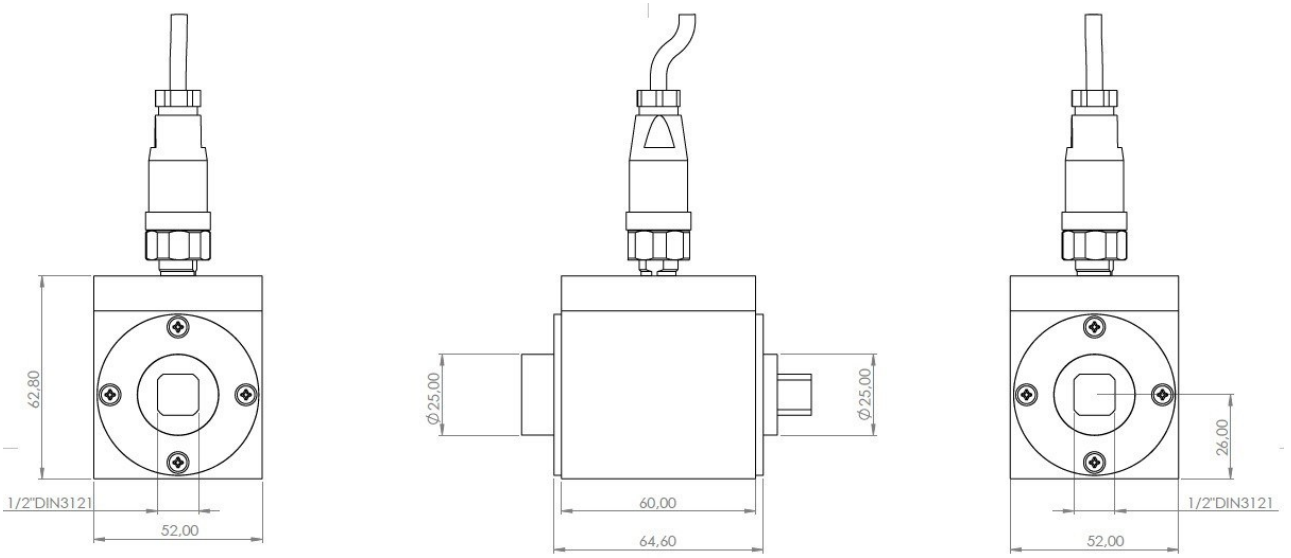

Vers. 140323 rev 2

10. MAINTENANCE

The minike testers are maintenance free. The electronics and the internal transducers have no wearing parts except the battery once its charge is over. The internal transducer should be calibrated every 12 to 30 months, depending on the frequency of use.

WARNING: The overload protection of the internal transducer is limited to 125% of nominal value. Damages due to overloading will result in inaccurate readings and will not be covered by our warranty.

IMPORTANT: the calibration certificate has a maximum validity of 36 months (ref. DIN 51309, ISO 101272). The instrument must be calibrated again (regardless of the date of last calibration):

- if it has been overloaded
- after any corrective maintenance (eg: upgrade with new software) - after improper use (eg: tested with impact wrench or jacks) - in case of doubt about the measurement results.

11. WARRANTY

1. This KOLVER product is guaranteed against defective workmanship or materials, for a maximum period of 12 months following the date of purchase from KOLVER, provided that its usage is limited to single shift operation throughout that period. If the usage rate exceeds of single shift operation, the guarantee period shall be reduced on a prorata basis.
2. If, during the guarantee period, the product appears to be defective in workmanship or materials, it should be returned to KOLVER or its distributors, transport prepaied, together with a short description of the alleged defect. KOLVER shall, at its sole discretion, arrange to repair or replace free of charge such items.
3. This guarantee does not cover repair or replacement required as a consequence of products which have been abused, misused or modified, or which have been repaired using not original KOLVER spare parts or by not authorized service personnel.
4. KOLVER accepts no claim for labour or other expenditure made upon defective products.
5. Any direct, incidental or consequential damages whatsoever arising from any defect are expressly excluded.
6. This guarantee replaces all other guarantees, or conditions, expressed or implied, regarding the quality, the marketability or the fitness for any particular purpose.
7. No one, whether an agent, servant or employee of KOLVER, is authorized to add to or modify the terms of this limited guarantee in any way. However it’s possible to extend the warranty with an extra cost. Further information at kolver@kolver.it

EXPLODED VIEWS AND PART LISTS

Minik1/S

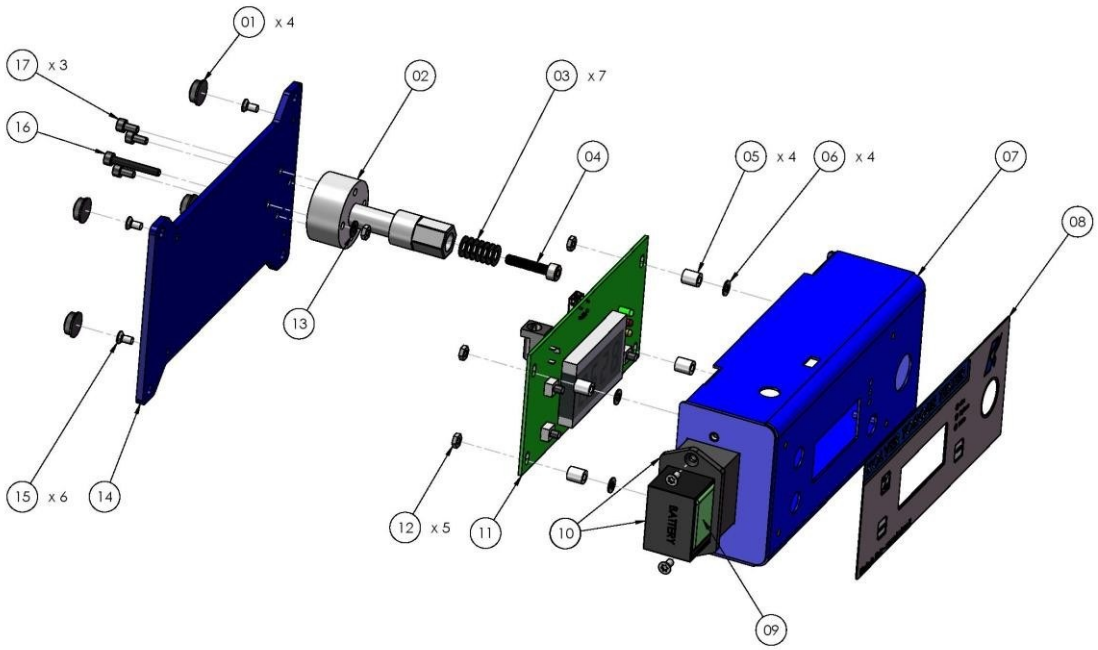

REF	DESCRIPTION	CODE
1	Plastic support (4 pcs)	800016
2	Internal transducer 1Nm (miniK1)	240505
3	Washer M4 (7 pcs)	241015
4	Screw M4 x 20	241014
5	Flat washer M3 (4 pcs)	800042
6	Nut 6,3 mm (4 pcs)	241003
7	Metal housing miniK../S	240001/BCU
8	Membrane miniK	241008
9	Battery 9V not rechargeable	241010
10	Battery seat miniK	241005
11	Board miniK + display	241002/N
12	Screw M3 (5 pcs)	800056
13	Washer M3	800041
14	Base miniKe	240001/BF2
15	Screw M3 x 6 TSP (6 pcs)	801002
16	Screw M3 x 22	241012
17	Screw M4 x 8 (3 pcs)	241011
	Bit - hex 1/4", L=50 mm, diam. 4 mm	FE-13040
	Case	241000
	Power supply 12V	241009/N

minik5/S – minik20/S

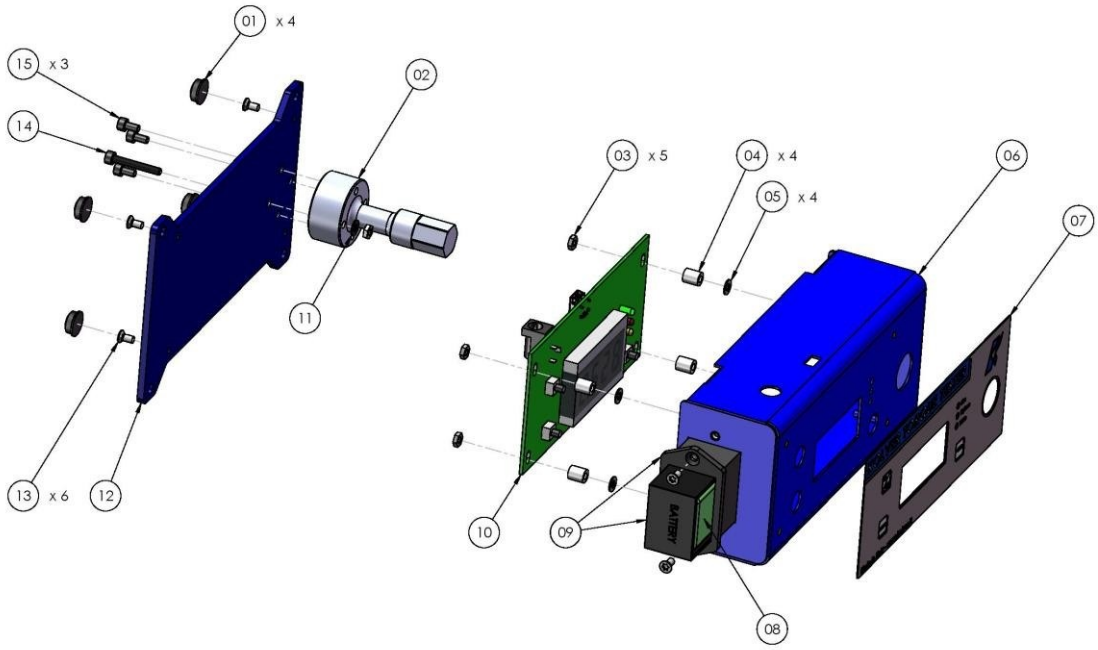

REF	DESCRIPTION	CODE
1	Plastic support (4 pcs)	800016
2	Internal transducer 5Nm (miniK5/s)	240503
	Internal transducer 20Nm (miniK20/s)	240504
3	Washer M3 (5 pcs)	800041
4	Flat washer M3 (4 pcs)	800042
5	Nut 6,3 mm (4 pcs)	241003
6	Metal housing miniK../S	240001/BCU
7	Membrane miniK	241008
8	Battery 9V not rechargeable	241010
9	Battery seat miniK	241005
10	Board miniK + display	241002/N
11	Screw M3 (5 pcs)	800056
12	Base miniKe	240001/BF2
13	Screw M3 x 6 TSP (6 pcs)	801002
14	Screw M3 x 22	241012
15	Screw M4 x 8 (3 pcs)	241011
	Joint simulator M6 (miniK5)	240600
	Joint simulator M8 (miniK20)	240800
	Case	241000
	Power supply 12V	241009/N

Vers. 140323 rev 2

Minike/xx/S

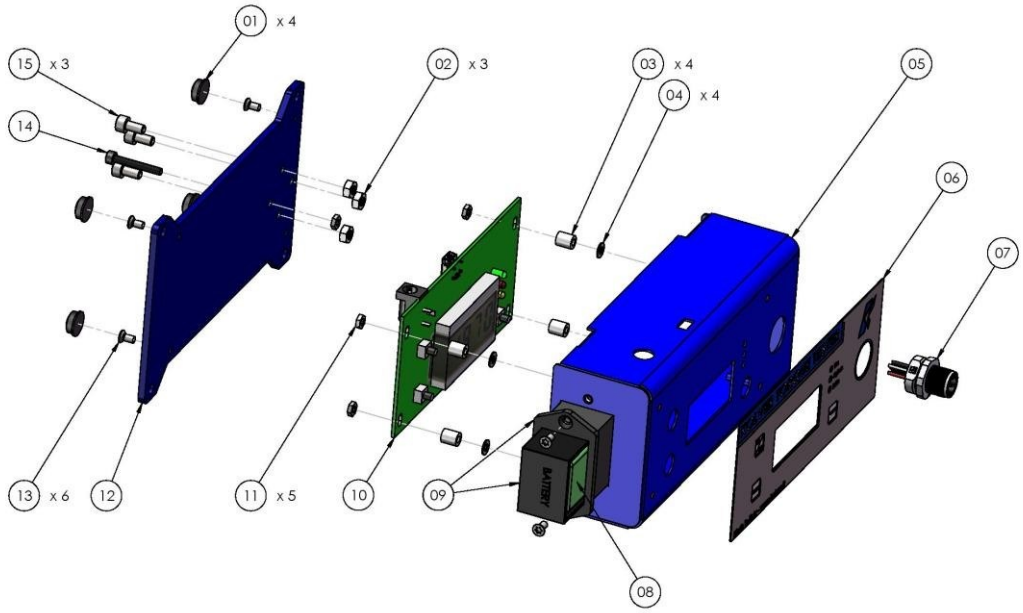

REF	DESCRIPTION	CODE
1	Plastic support (4 pcs)	800016
2	Washer M3 (3 pcs)	800041
3	Flat washer M3 (4 pcs)	800042
4	Nut 6,3 mm (4 pcs)	241003
5	Metal housing miniK../S	240001/BCU
6	Membrane miniK	241008
7	Connector M 5 pin	231666
8	Battery 9V not rechargeable	241010
9	Battery seat miniK	241005
10	Board miniK + display	241002/N
11	Screw M3 (5 pcs)	800056
12	Base miniKe	240001/BF2
13	Screw M3 x 6 TSP (6 pcs)	801002
14	Screw M3 x 22	241012
15	Screw M4 x 8 (3 pcs)	241011
	Case	241000
	Power supply 12V	241009/N

JOINT SIMULATORS

Threaded attachment (only on request)



Code	Model	Upper attachment	Lower attachment	Torque tester
240620	Hex13/M1,6	Female thread M1,6	Hex Female 13mm	MiniK1
240621	Hex13/M2	Female thread M2		K1
240622	Hex13/M3	Female thread M3		MINIKEF1

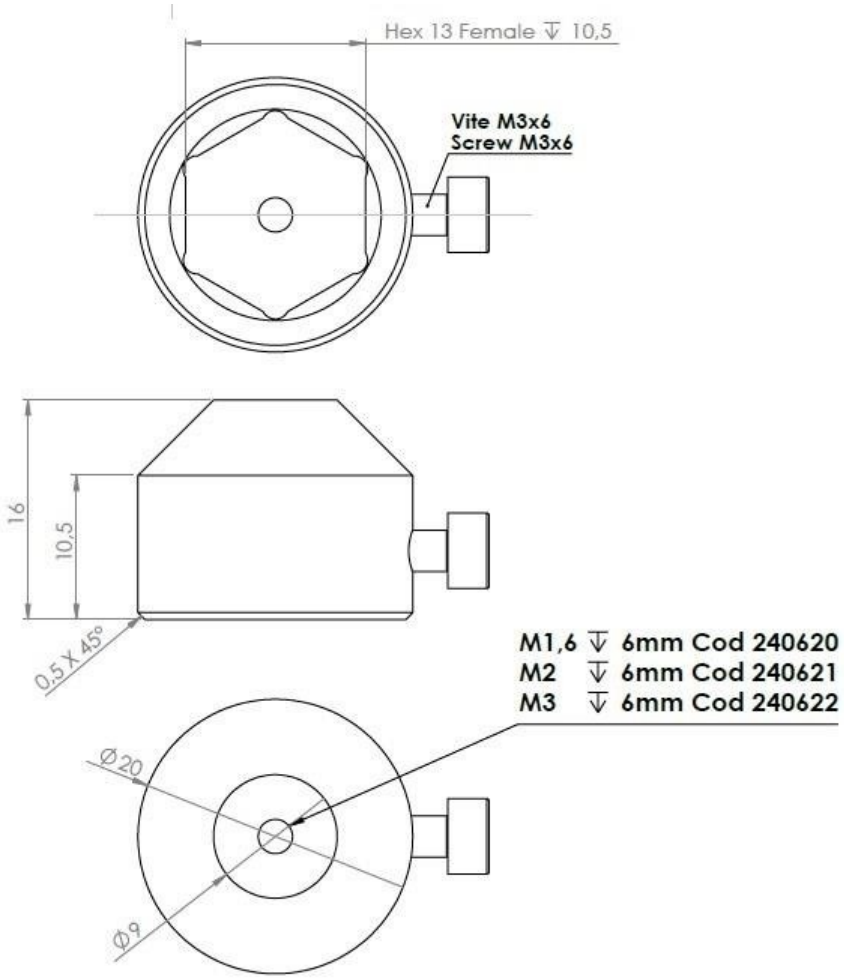

M4 joint simulator with bearings and washers



Code	Model	Upper attachment	Lower attachment	Torque tester
240640	Hex13 – 1/4“ M4	Male 1/4“	Hex Female 13mm	MINIK1 e K1 (on request) MINI KEF1 (standard)

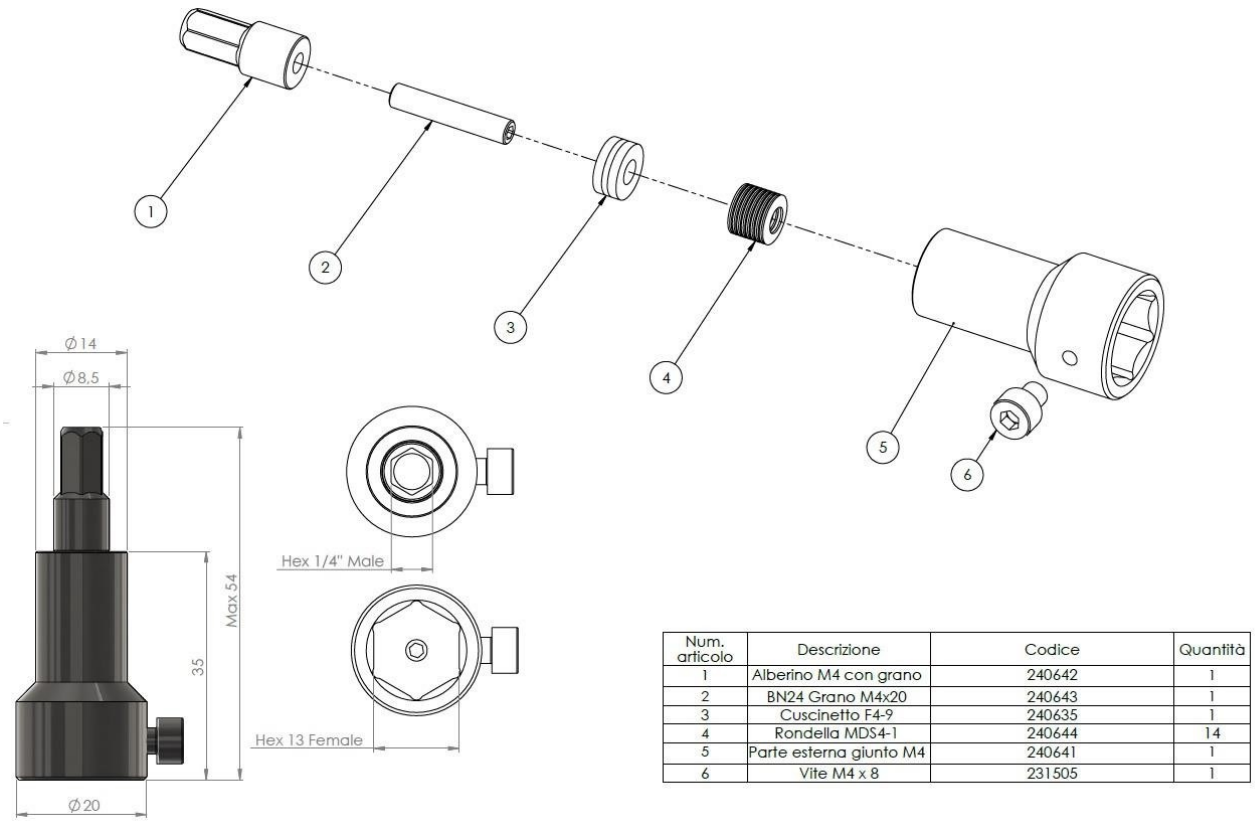

Num. articolo	Descrizione	Codice	Quantità
1	Alberino M4 con grano	240642	1
2	BN24 Grano M4x20	240643	1
3	Cuscinetto F4-9	240635	1
4	Rondella MDS4-1	240644	14
5	Parte esterna giunto M4	240641	1
6	Vite M4 x 8	231505	1

Vers. 140323 rev 2

M6 and M8 joint simulator with spring washers



Code	Model	Upper attachment	Lower attachment	Standard equipment
240600	Hex13 – 1/4“ M6	Male 1/4 “	Female hex. 13mm	MiniK5 MINIKEF5 K5
240800	Hex13 – 1/4“ M8	Male 1/4 “	Female hex. 13mm	MiniK20 MINIKEF20 K20

M6 joint simulator Cod. 240600

Disposizione molle a tazza
Giunto S-E



N°	Description	Code	Quantity
1	Seiger	240601	1
2	Alberino	240602	1
3	Molla a tazza	240603	10
4	Parte esterna	240604	1
5	BN1593 vite m3x5 TBEI	240605	1

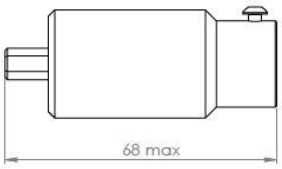

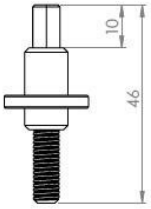

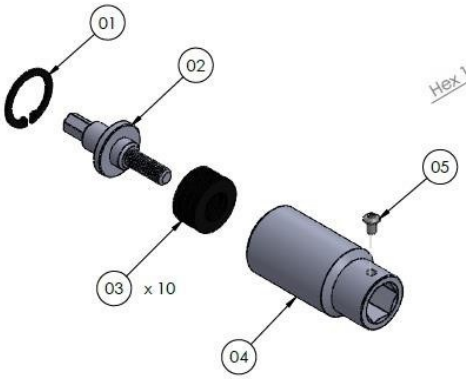

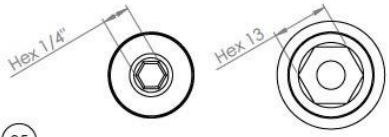

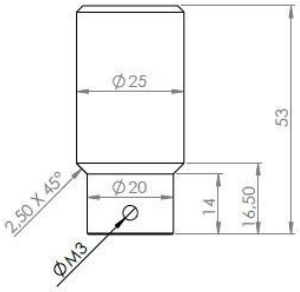

M8 joint simulator Cod. 240800 - Standard S-E version



N°	Description	Code	Quantity
1	Seiger	240801	1
2	Alberino	240802	1
3	Molla a tazza	240803	14
4	Parte esterna	240804	1
5	BN1593 vite m3x5 TBEI	240605	1

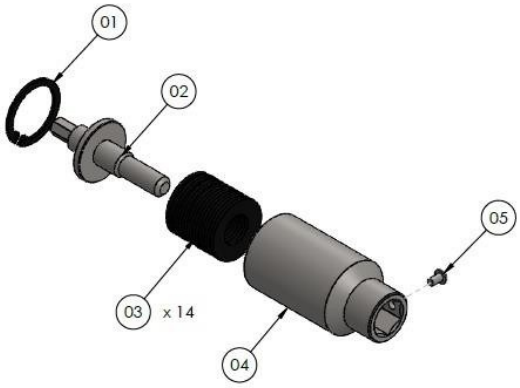

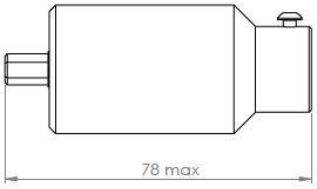

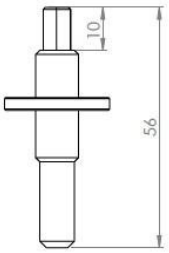

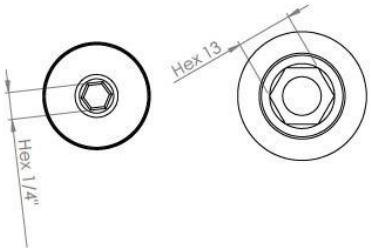

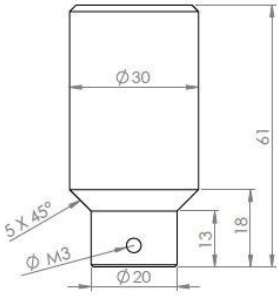

M12 joint simulator with bearings and spring washers



Code	Model	Upper attachment	Lower attachment	Standard equipment
240901	3/8” M12	Female 3/8”	Male 3/8”	MINIKEF50
240902	1/2” M12	Female 1/2”	Male 1/2"	MINIKEF100

M12 3/8” Joint simulator Cod 240901

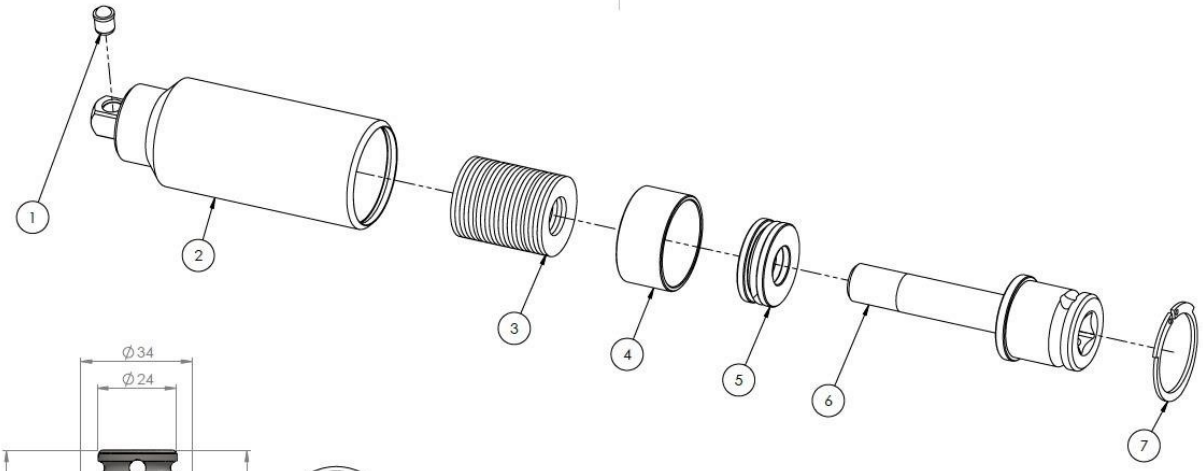

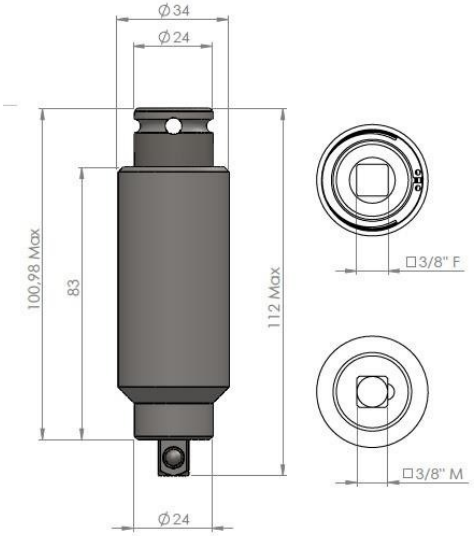

Num. articolo	DESCRIZIONE	Codice	Quantità
1	BN55523 POSIZ MOLLA D6 TESTINA 90° 3-8	800511	1
2	PARTE ESTERNA GIUNTO M12 QUADRO 3-8	240815	1
3	MOLLA A TAZZA M8	240803	19
4	ALLOGGIAMENTO CUSCINETTO	240807	1
5	CUSCINETTO REGGISPINTA SIM GIUNTO	240808	1
6	ALBERINO M12 INGRESSO 3-8	240816	1
7	BN 830 1291777 V-ANELLO ELASTICO 30X1.2	240827	1

M12 1/2” Joint simulator Cod 240902

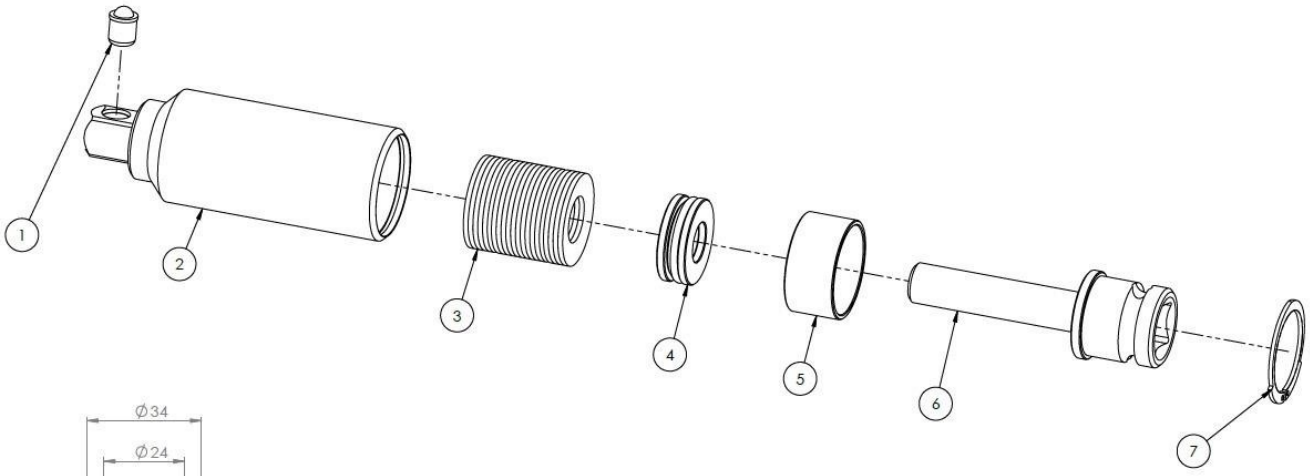

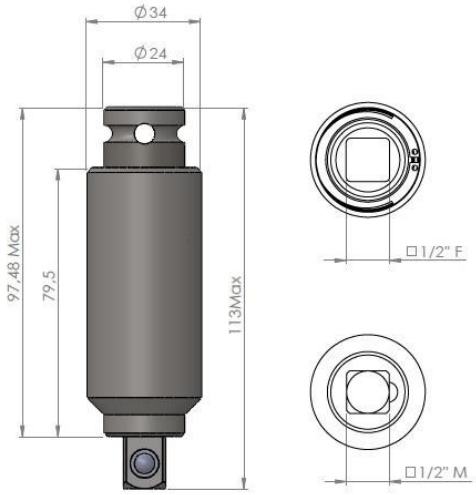

Num. articolo	DESCRIZIONE	Codice	Quantità
1	POSIZ MOLLA D8	800512	1
2	PARTE ESTERNA GIUNTO M12 QUADRO 1-2	240825	1
3	MOLLA A TAZZA M12	240828	19
4	CUSCINETTO REGGISPINTA SIM GIUNTO	240808	1
5	ALLOGGIAMENTO CUSCINETTO	240807	1
6	ALBERINO M12 INGRESSO 1-2"	240826	1
7	BN 830 1291777 V-ANELLO ELASTICO 30X1.2	240827	1

DECLARATION OF CONFORMITY

CE

KOLVER S.r.l.
VIA DELL'ELETTRONICA, 14/16 **36016 THIENE (VI) ITALIA**

Declare that the new tool here described: Torque tester:

MINI K1/S	021402/S
MINI K5/S	021403/S
MINI K20/S	021404/S
MINI KEF1	021405/F1
MINI KEF5	021405/F5
MINI KEF20	021405/F20
MINI KEF50	021405/F50
MINI KEF100	021405/F100
MINI KE/5/S	021405/5/S
MINI KE/25/S	021405/25/S
MINI KE/50/S	021405/50/S
MINI KE/100/S	021405/100/S

Is in conformity with the following standards and other normative documents: 2006/42/CE, LVD 2014/35/UE, EMCD 2014/30/UE, EN 62841-2-2:2014, EN 62841-1: 2015, EN 60204-1, EN 61000-6-2, EN 61000-6-4.
It is also in conformity with RoHS III normative (2011/65/UE and following 2015/863).

Name: Giovanni Colasante
Position: General Manager
Person authorized to compile the technical file in Kolver

Thiene, January 1st 2023

Giovanni Colasante

Vers. 140323 rev 2

TORQUE ANALYZER SOFTWARE

Torque Analyzer software allows for communication between our mini k series torque testers and your PC. Torque Analyzer software allows the capture of torque measurements directly from the torque tester including track mode, graphic display readings, and the real-time calculation of the machine capacity represented by Cm and Cmk dat0061.

1. INSTALLATION

Torque Analyzer is a plug-and-play software.
Just launch the "**Kolver_Torque_Analyzer_ver_X_X_X.exe**" (X_X_X is the version of the software).

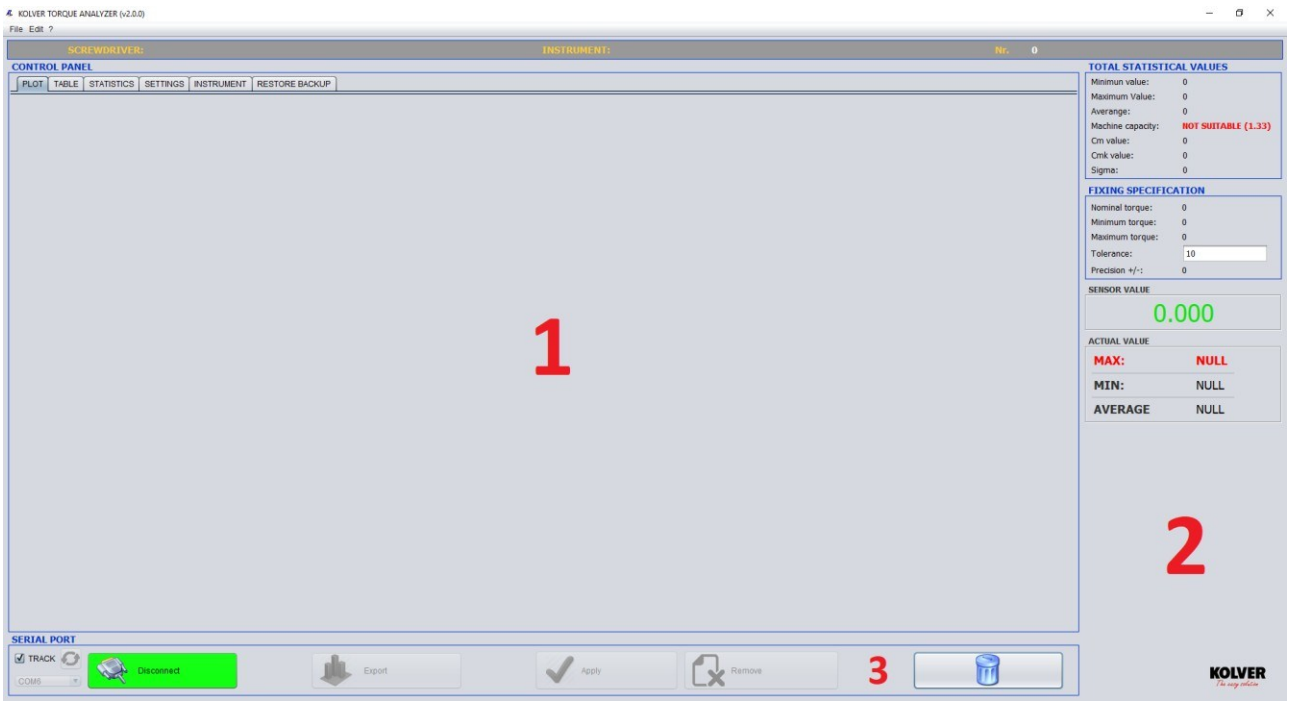

1: Kolver_Torque_Analyzer_ver1_0_1 software main screen

The home page is made of three sections:

1- "**Control Panel**": to display results, graphics, tables, setting and info of the tester. 2- "**Report**": to display values (max, min, cm, cmk, in total, in real time...etc.)
3- "**Interface**": connection, modification and export of data.

2. CONNECTION TO MINIK/S

Connect the minik/s to your pc through the usb port. Then push the Connect button.
The software will display the correct connection (see Picture 2). Unless
it will show the error and how to proceed.

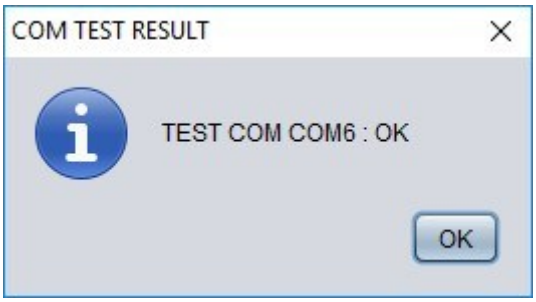

2: Output of correct connection.

3. TORQUE VALUE CAPTURE

How to capture the torque values:

1- Track Mode: it allows to capture and display the trend of the torque signal given by the minik/s.

2- Max Value Mode: it allows to capture and display the max torque value given by the minik/s.

The mode must be set on the minik/s: on the main screen flag or not the Track option.
However, Torque Analyzer has been designed to automatically align the receipt of the first measure by detecting the capture mode set in mini k.

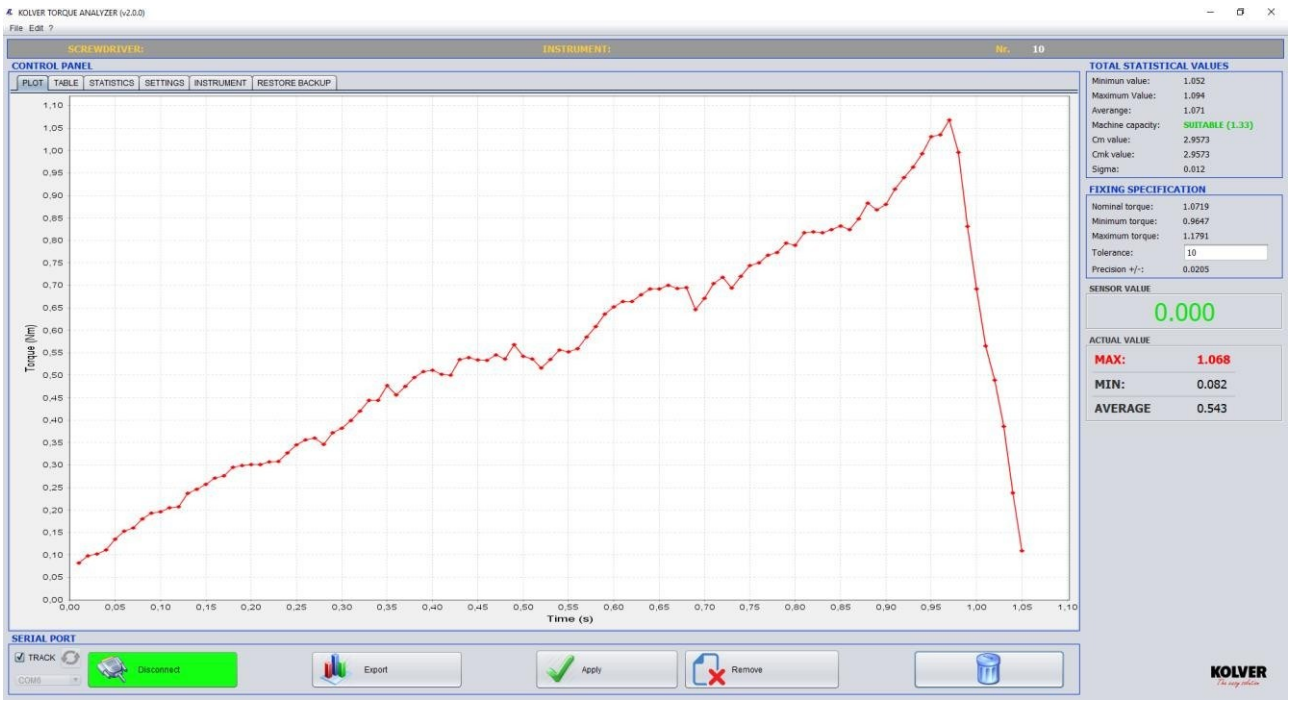

Picture 3: To flag Track mode.

4. DISPLAY AND SETUP

"**Control Panel**" area has 4 sections:

A. GRAPHIC: This section allows to display the graphics of the values (See picture 3).
There is also the possibility to zoom on specific areas.

Two types of visualizations:

1- '**X-Y Plot**': temporal visualization of values.
2- '**Bar Plot'**: bar visualization of values.

Type of visualization can be set from the menu:
Edit ❾ Modify ❾ Chart.

B. TABLE: in this section all the values are displayed (max and min, average, date,..).

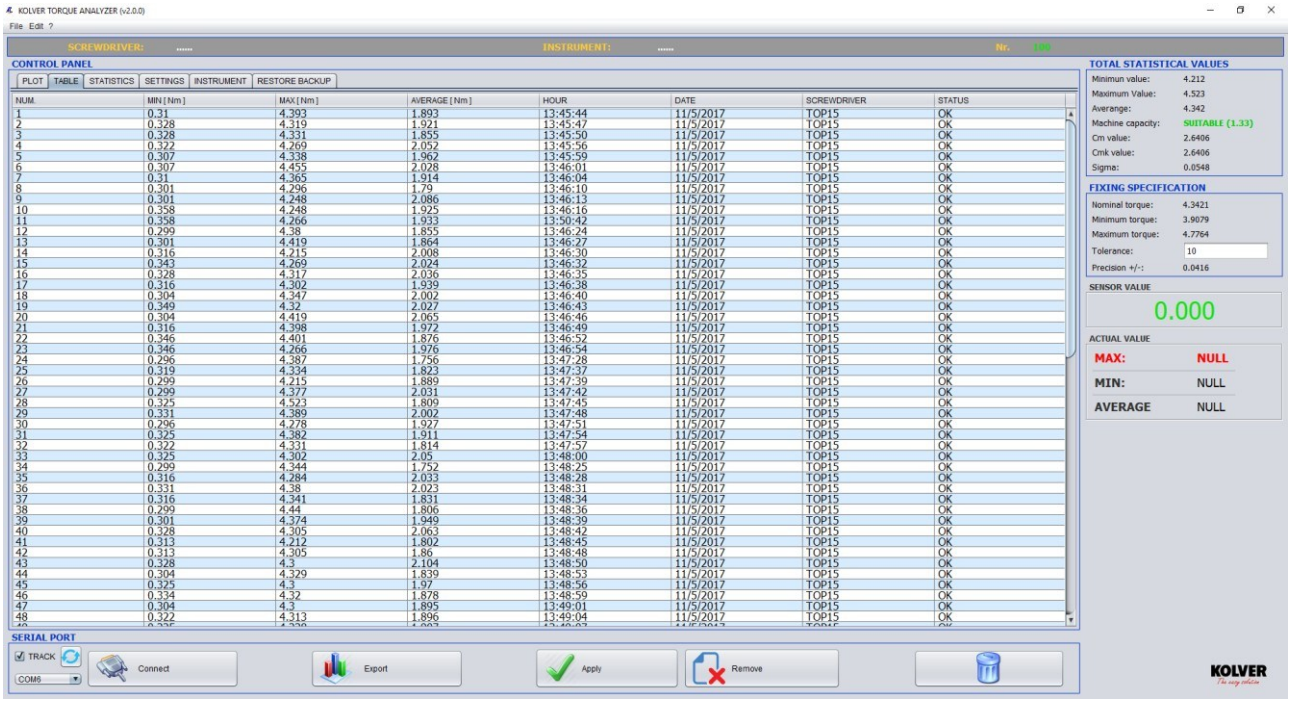

Picture 4: "TABLE" section; 10 values.

C. STATISTICS

In this section, it is possible to display statistical data based on their detection, classification, synthesis and representation. (See picture 5).

Other features:

a. PROPRIETIES: it allows to choose how to visualize the curve to plot and any graphics shake if needed.

b. PLOT: Print/ Update statistics graphics.

c. REPORT: to export the data in pdf file.

d. LOAD: to upload data previously sampled and saved.

e. SAVE: to save the entire set of data, relating to the measurements done.

D. SETTINGS: Setting section (reports, graphics, date, torque tester info).

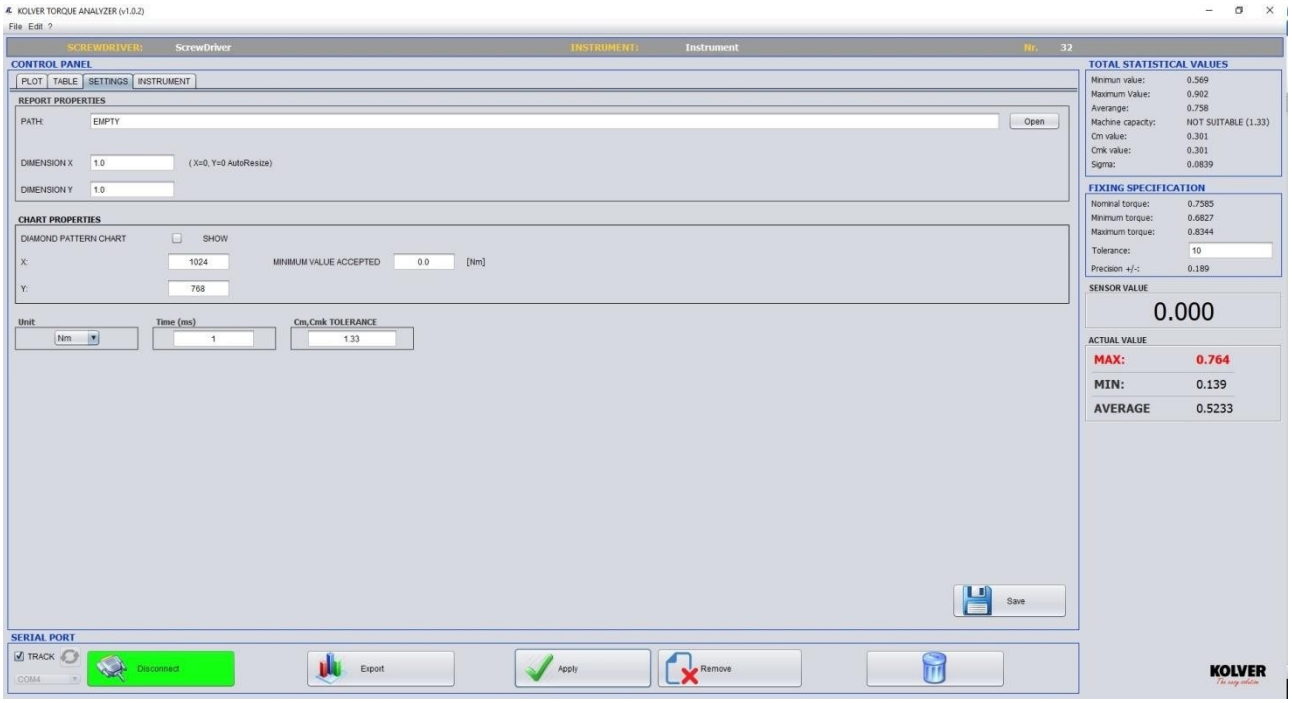

Picture 6: "SETUP" Section

1- REPORT

- **Path:** path to search the image file to enter in the head of the report. We suggest to upload images not bigger than 240x240 pixels.

- **Dimension X:** Value of adaptation along the X axis of the uploaded image.

- **Dimension Y:** Value of adaptation along the Y axis of the uploaded image.

-Torque range: the value should be included in the pre-set torque range to be defined as correct**.**

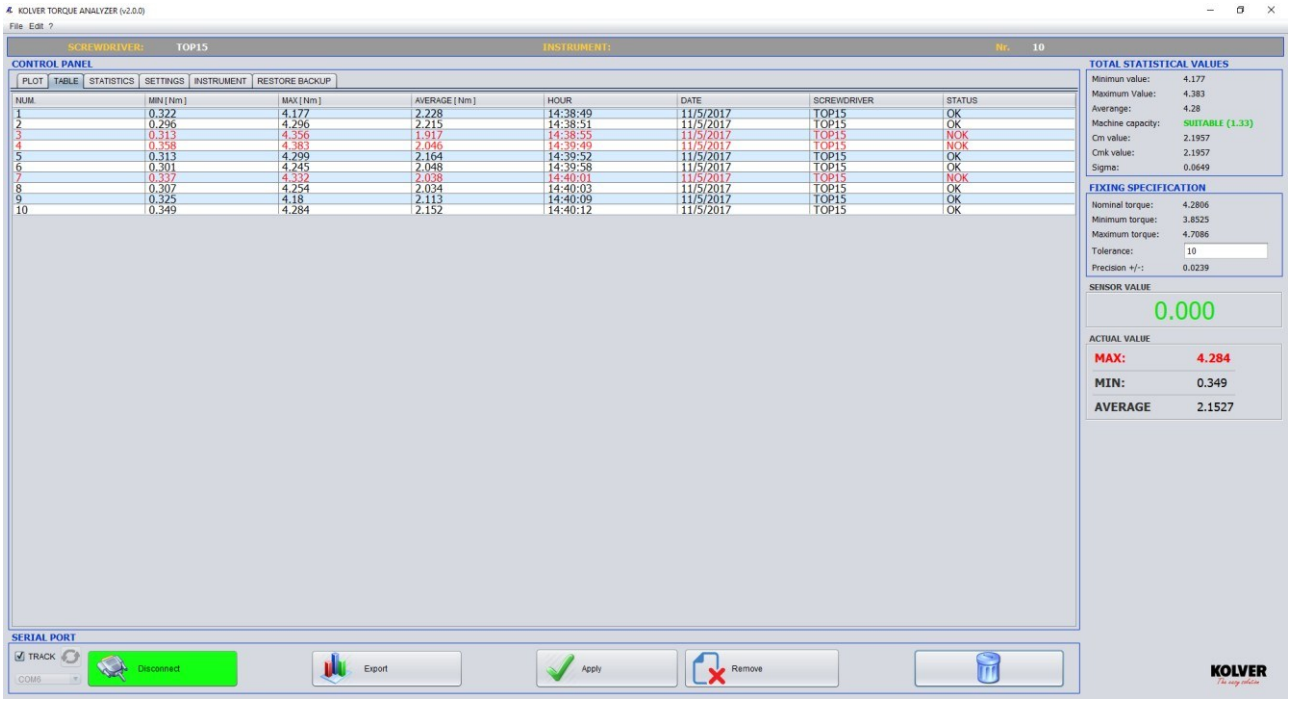

2- GRAPHIC FEATURE

-Diamond pattern chart: in Track mode, it allows the visualization of points of interpolation of captured values.

-X: width in pixels of the uploaded image.
-Y: height in pixels of the uploaded image

-Min value accepted: Min value captured and accepted by the software.

3- UNIT AND TOLERANCE

-Unit: it allows to choose between the following units of measurements: **Nm, lbf.in and kgf.cm**

-Tolerance Ck, Cmk: it allows to set the tolerance to check the machine capacity.

It's also possible to save the set up of the data tapping **Save** and keep the same setting for the next sessions.

E. TORQUE TESTER: in this section it is allowed to enter all the data of the mini k.

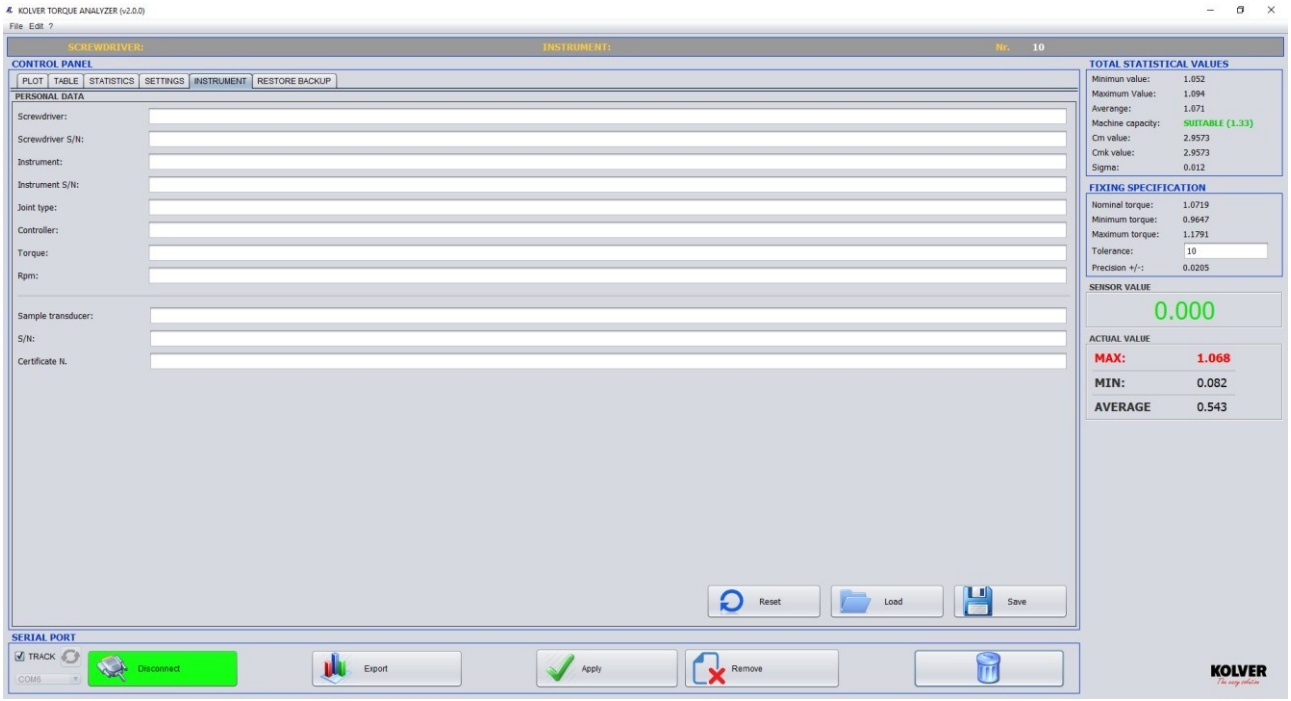

Picture 7 : "TESTER" section.

F. BACKUP: Data are automatically saved in a backup file.
Available a section of the software to restore the data with filters on day, month, year and delete date.

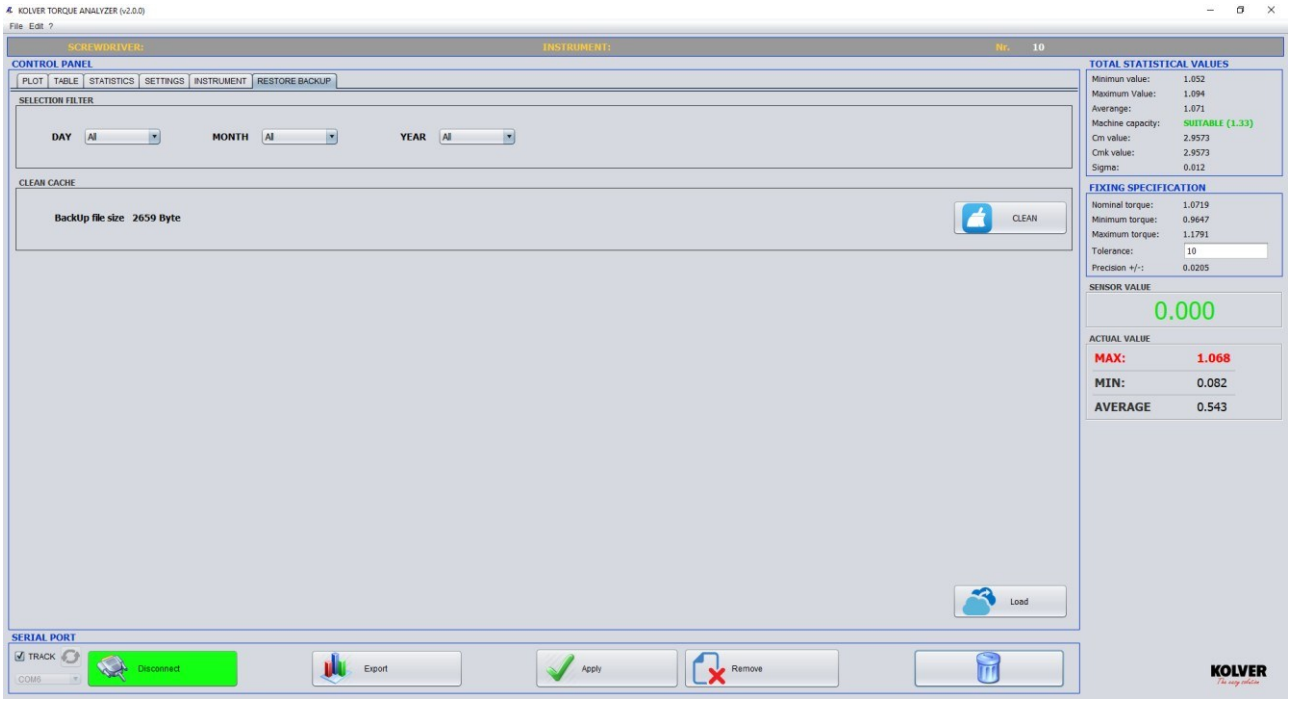

5. RESULTS: MODIFICATION AND EXPORT

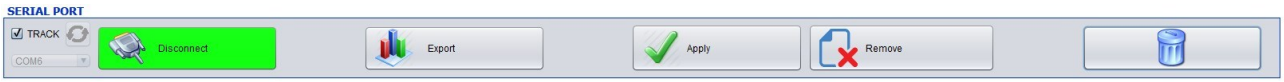

Picture 9 : Connection, data capture, export.

A- MODIFICATION

It's possible to modify or delete one or more captured data (see picture 7).

- **Removal**: in the "**TABLE**" section of the Control Panel, select one or more rows to be deleted. Then push "Delete" to confirm.
  To delete all the data, push the basket icon, then confirm.

- **Modify**: in the "**TABLE**" section of the Control Panel, position the cursor on the cell to modify, double click, enter the data and puch Apply to confirm.
  In case of any error, they won't be considered and the value will remain the same. In case of typing error, in the Menu ❾File ❾ Go back.

B- EXPORT

While pushing "**Export**", it will be displayed a window to select how to export the results (see Picture 10).

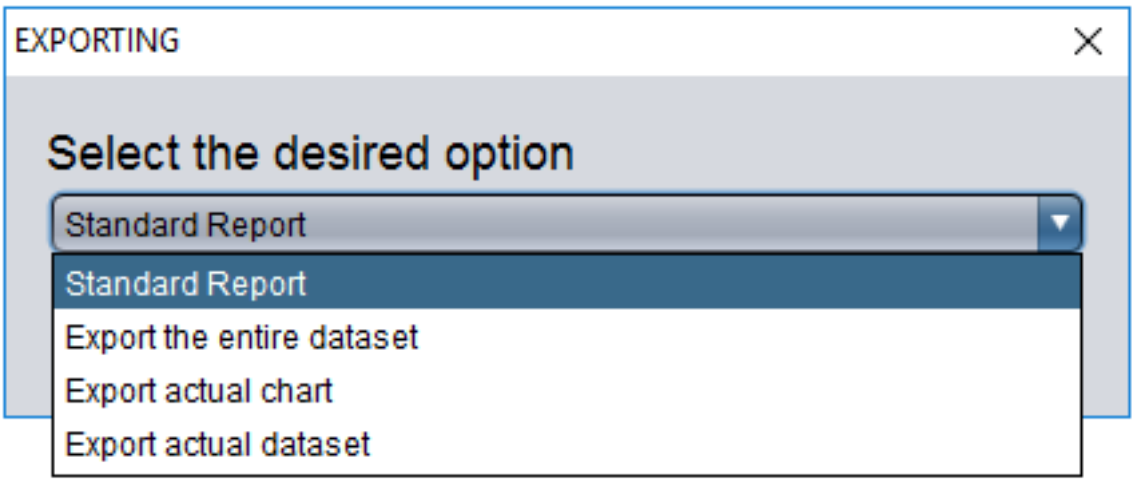

Picture 10: To select how to export

-Standard Report: it allows to export a standard report (.xls file) including 30 values max, Cm, Cmk and all the feature of the tester used.

CALIBRATION REPORT

KOLVER
The easy solution

PERSONAL DATA

SCREWDRIVER:	Screwdriver	CONTROL:	Controller
S/N:	Screwdriver S/N	S/N:	Instrument S/N
		TORQUE:	Torque
MEASURING INSTRUMENT:	Instrument	RPM:	Rpm
FIXING/JOINT:	Joint	UNIT:	Nm

FIXING SPECIFICATION

NOMINAL TORQUE:	3.2921
MINIMUM TORQUE:	2.9628
MAXIMUM TORQUE:	3.6213
TOLLERANCE:	10
PRECISION +/-:	0.0288
TESD. TEST:	Sample Trasducer
S/N:	S/N
CERTIFICATE NUM.:	Certificate N.

STATISTICAL VALUES RESULT

MINIMUM VALUE:	3.212
MAXIMUM VALUE:	3.387
AVERAGE VALUE:	3.2921
MACHINE CAPACITY:	SUITABLE (1.33)
CM:	2.0551
CMK:	2.0551
SIGMA:	0.0533

MEASURED DATA

	READINGS
1	3,381
2	3,289
3	3,2579
4	3,387
5	3,296
6	3,328
7	3,325
8	3,252
9	3,2119
10	3,332
11	3,302
12	3,219
13	3,233
14	3,244
15	3,264
16	3,379
17	3,362
18	3,35
19	3,387
20	3,318
21	3,2349
22	3,284
23	3,274
24	3,283
25	3,286
26	3,214
27	3,309
28	3,243
29	3,219
30	3,298

Measures carried out by: OP. NAME

DATE: 2017/02/10

SIGNATURE: Responsible

Picture 11: Standard Report

-Complete set of values: it allows to export all the captured values (.xls file) and the graphics of the results.
-Export current graphic: it allows to export any value in Graphic section of the Control Panel (.pgn file). For the resolution of the image see SETTING chapter.
- Export last measure: it allows to export (.xls file) the set of data referring to the last measure done. The table will show on X: time and on Y: torque value.

6. REPORT AREA

In this section, it will be displayed the statistics results of all the values including the instantaneous data. In particular:

-Max value: max value of torque acquired
-Min value: min value of torque acquired (only in Track mode).
-Average value: average value of torque acquired (only in Track mode).

-Cm: value that indicates the machine capacity or process within the tolerance range.
-Cmk: value that indicates the machine capacity or process within the tolerance range of the nominal torque value. A high Cmk indicated the the machine or the has a low dispersion, and is well centered in the middle of the range of tolerance.
-Capacity: it indicates if the process f measurement is suitable or not.

Cm, Cmk ≥ 1.33 ➽ SUITABLE

Cm, Cmk < 1.33 ➽ NOT SUITABLE

There is the possibility to modify the index of tolerance to check the capacity (default=1.33): in "**SETTINGS**", set the desired value in "**TOLERANCE Cm,Cmk**".

-Nominal Torque (Cn): average torque value
-Max torque: Cn+Tolerance (Cn)%
-Min torque: Cn-Tolerance (Cn)%

- Sensor value: torque value given from the mini k.
-Current values: values referred to the last one acquired.

7. LANGUAGE

Four languages available: English, French, Spanish and Italian.
To change the language, in the menu push on Edit ➽Language.

8. SYSTEM REQUIREMENTS

It’s necesary to install the following software:

- **Java (64-bit)** (https://www.java.com/it/download/)