K-TESTER

OPERATOR MANUAL

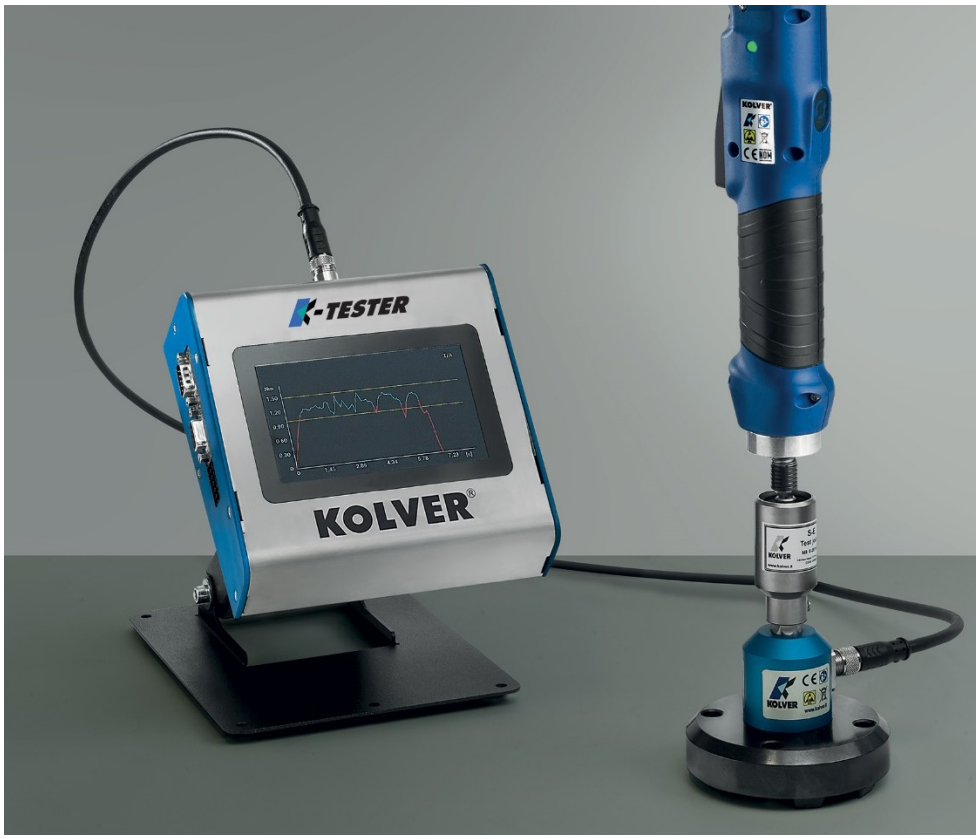

IDENTIFICATION DATA OF THE MANUFACTURER

KOLVER S.r.l.
VIA DELL'ELETTRONICA, 14/16
36016 THIENE (VI) ITALIA

IDENTIFICATION DATA OF THE PRODUCT

READER UNIT

Code	Model
020410	TQA

STATIC TRANSDUCERS

Code	Model	Torque range	Accuracy
023001/I	KTI1	0.05 - 1 Nm	± 2 cNm
023005/I	KTI5	0.3 - 5 Nm	± 4 cNm
023020/I	KTI20	0.5 – 20 Nm	± 10 cNm
023050/I	KTI50	2 - 50 Nm	± 20 cNm
023100/I	KTI100	5 – 100 Nm	± 40 cNm

ROTARY TRANSDUCERS

Code	Model	Torque range	Accuracy
021406/R5	KTE5 + 020079	0.5 – 5 Nm	± 4 cNm
021406/R25	KTE25 + 020079	2 - 25 Nm	± 12,5 cNm
021406/R50	KTE50 + 020079	5 – 50 Nm	± 20 cNm
021406/R100	KTE100 + 020079	10 – 100 Nm	± 40 cNm

DECLARATION OF CONFORMITY

CE

KOLVER S.r.l. declares that the new tool here described: control unit model KDU-1A is in conformity with the following standards and other normative documents: 2006/42/CE, LVD 2014/35/UE, EMCD 2014/30/UE, EN 62841-2-2:2014, EN 62841-1: 2015, EN 60204-1, EN 61000-6-2, EN 61000-6-4.
It is also in conformity with RoHS III normative (2011/65/UE and following 2015/863).

Name: Giovanni Colasante
Position: General Manager
Person authorized to compile the technical file in Kolver

Giovanni Colasante

Thiene, January 1st 2023

Table of Contents

INSTALLATION 4
Reader mounting 4
Connectors 5
Transducers and Joint Simulators 7
KTI transducers 7
Joint Simulators 9
KTEI transducers 14
Accessories 15
DOCK-08 15
Test Station 15
2 and 4 position transducer holders 16
Joint simulator holders for KTEI rotary transducers 16
QUICK START 18
OPERATING THE K-TESTER 19
Main Screen – FREE-RUN mode 19
Main Screen – TARGET-TORQUE mode 19
Main Screen – GRAPH 20
Reports Screen 20
Connecting a barcode scanner 21
CONFIGURING THE K-TESTER 22
MAIN MENU 22
GENERAL SETTINGS 22
PROGRAMS 24
USB 28
MODBUS TCP 29
OPEN PROTOCOL 30
CN4 I/O 31
K-TORQUE-ANALYZER PC SOFTWARE 33
MAINTENANCE AND CARE 36
GUARANTEE 37

INSTALLATION

Reader mounting

The K-TESTER unit is free-standing. It can be wall mounted via 4x M4x8mm screws in the back.

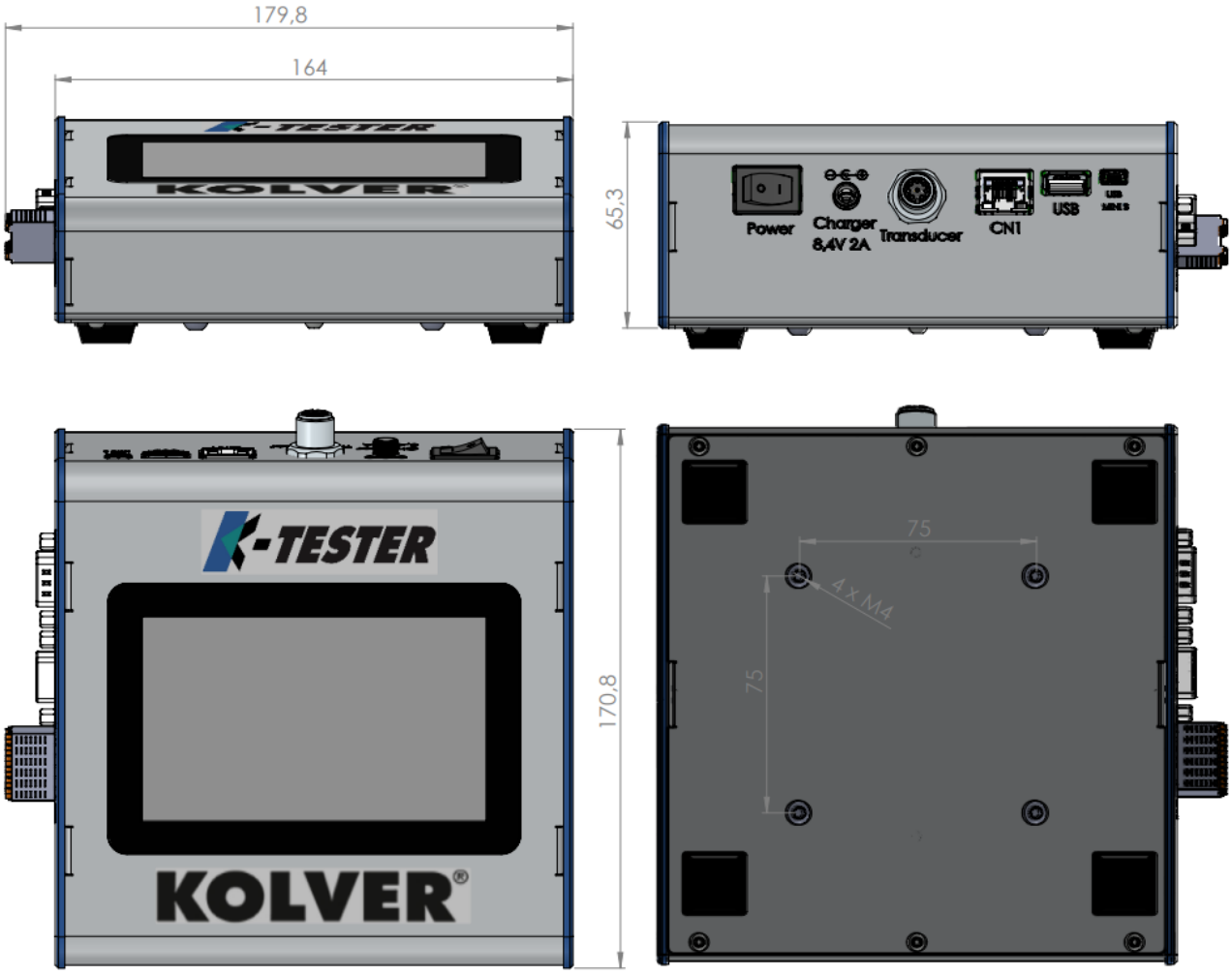

Also available separately:

- vertically and horizontally adjustable bracket (part number 010401)
- swivel table stand (part number 010402)

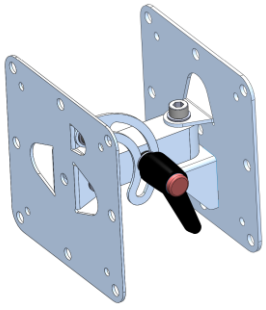

010401



010402

Connectors

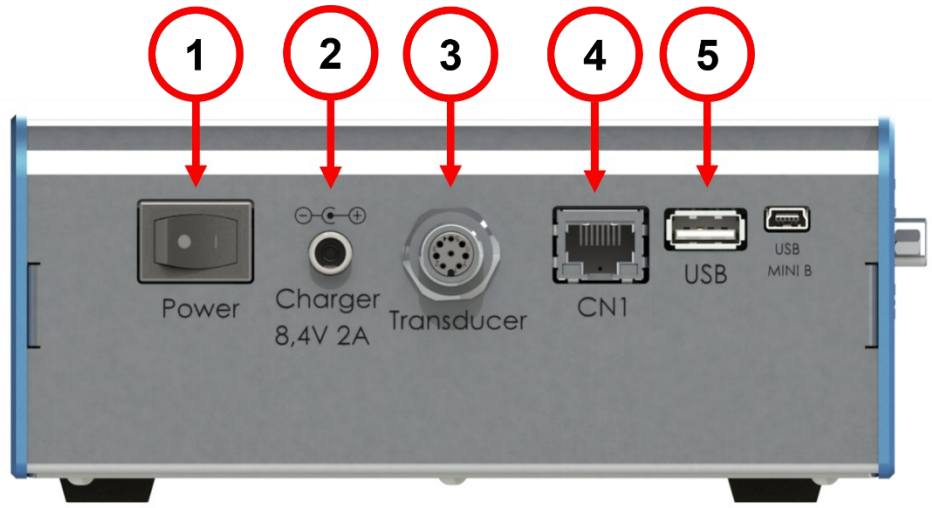

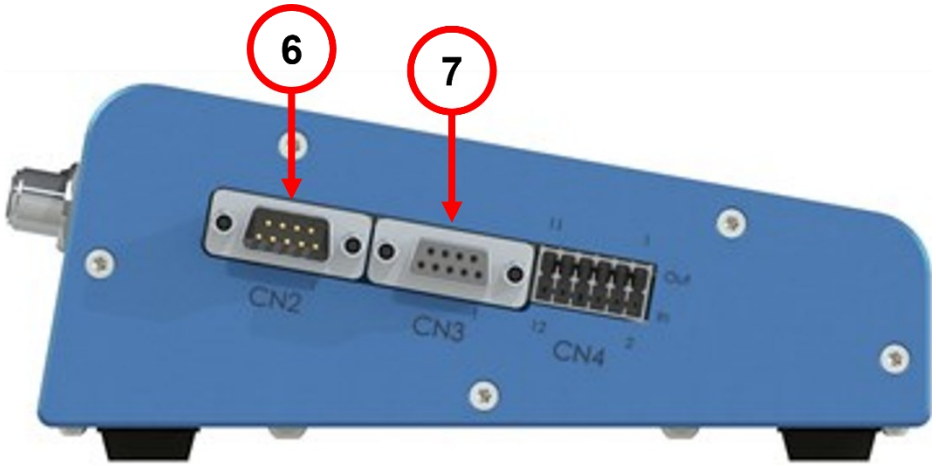

1. Power On/Off

2. Charger (ONLY USE ORIGINAL CHARGER)

Only use the original power adapter / charger included with the K-TESTER to power the K-TESTER unit and charge the internal Li-Ion battery.
Kolver is not responsible for damages or injuries arising from using a third-party charger.

The K-TESTER is powered by an internal Li-Ion battery. As such, it should be stored in a climate-controlled environment, away from sources of heat, humidity, and vibration. The included charger can power the unit and charge the battery at the same time. When fully charged, the battery can power the unit for approximately 10 hours. Charge time is 4-5hr.

3. Transducer

To connect to a KTI transducer or KTEI box (part number 020079) for KTE rotary transducers.



K-TESTER with KTI transducer



K-TESTER with KTEI board and KTE rotary transducer

4. Ethernet

To connect to the K-Torque-Analyzer software.

5. USB

Plug in a FAT32 formatted flash drive to automatically save torque results, report, as well as backup or restore all settings.

6. Serial male DB9

To connect a barcode scanner for program recall or serial number tracking. See Connecting a barcode scanner.

7. Serial female DB9

To connect a serial printer, PLC, or other device and receive results.
Serial port parameters: RS232 – 9600 baud – 8 data bits – 1 stop bit – no parity

8. CN4 Digital I/O

Digital I/O to connect Screw OK/NOK signals on a PLC or other device.

Transducers and Joint Simulators

KTI transducers

Securely fix the KTI transducer to the work area via the four fixing holes.

Never use a KTI transducer without having it securely fixed to the work surface.
Even a low power tool can deliver enough torque to spin an unsecured KTI transducer on its axis, potentially injuring personnel and/or damaging the unit.
The rubber feet/pads can be removed to fix on a benchtop or plate.

KTI 1-5-20

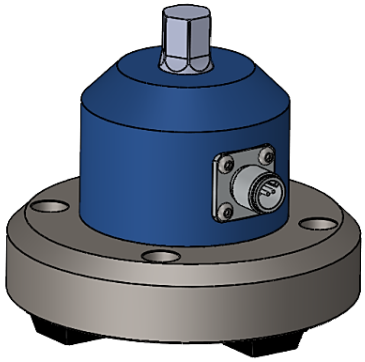

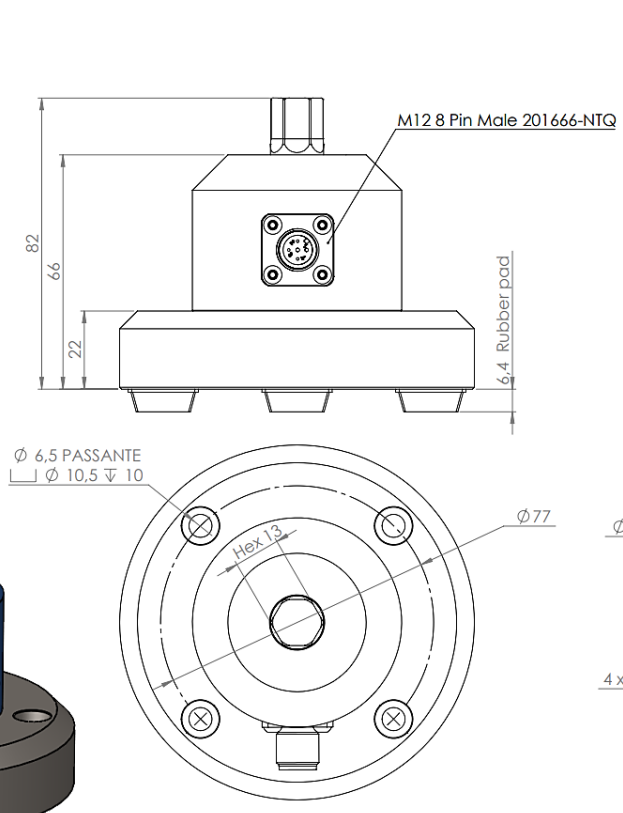

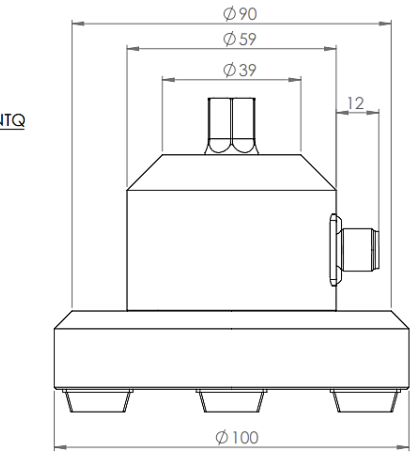



Dima di foratura per fissaggio
Drilling plate for fixing

KTI 50

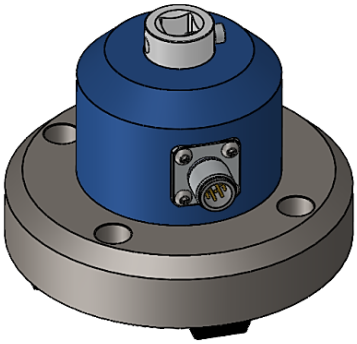

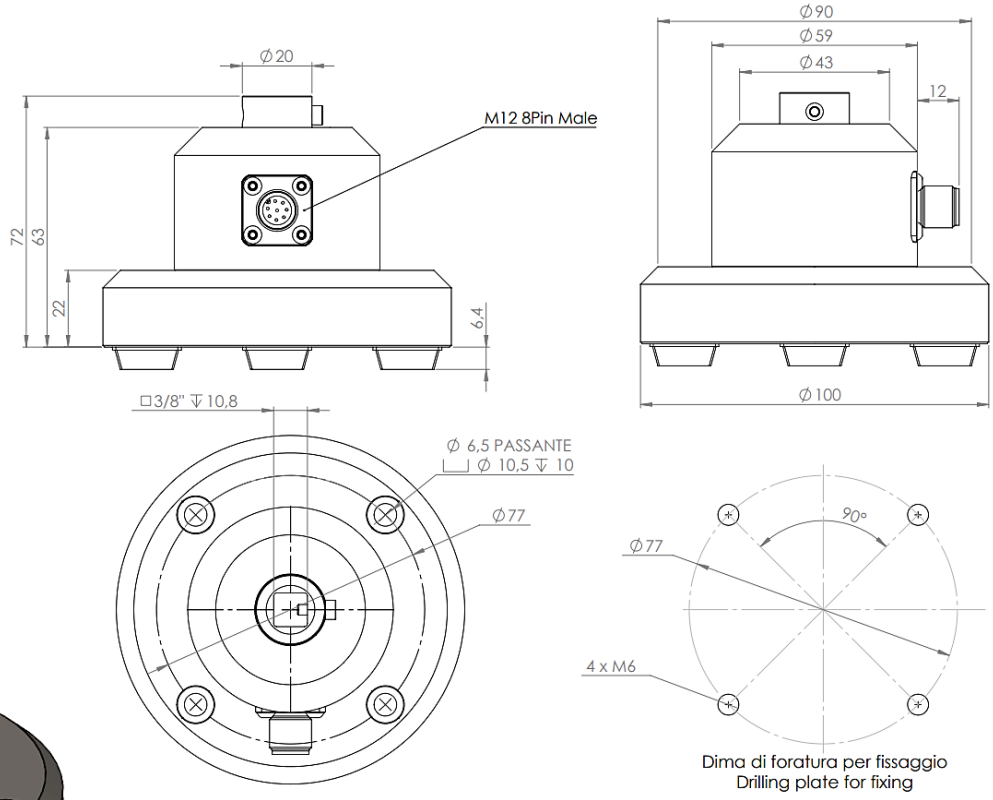

Dima di foratura per fissaggio
Drilling plate for fixing

KTI 100

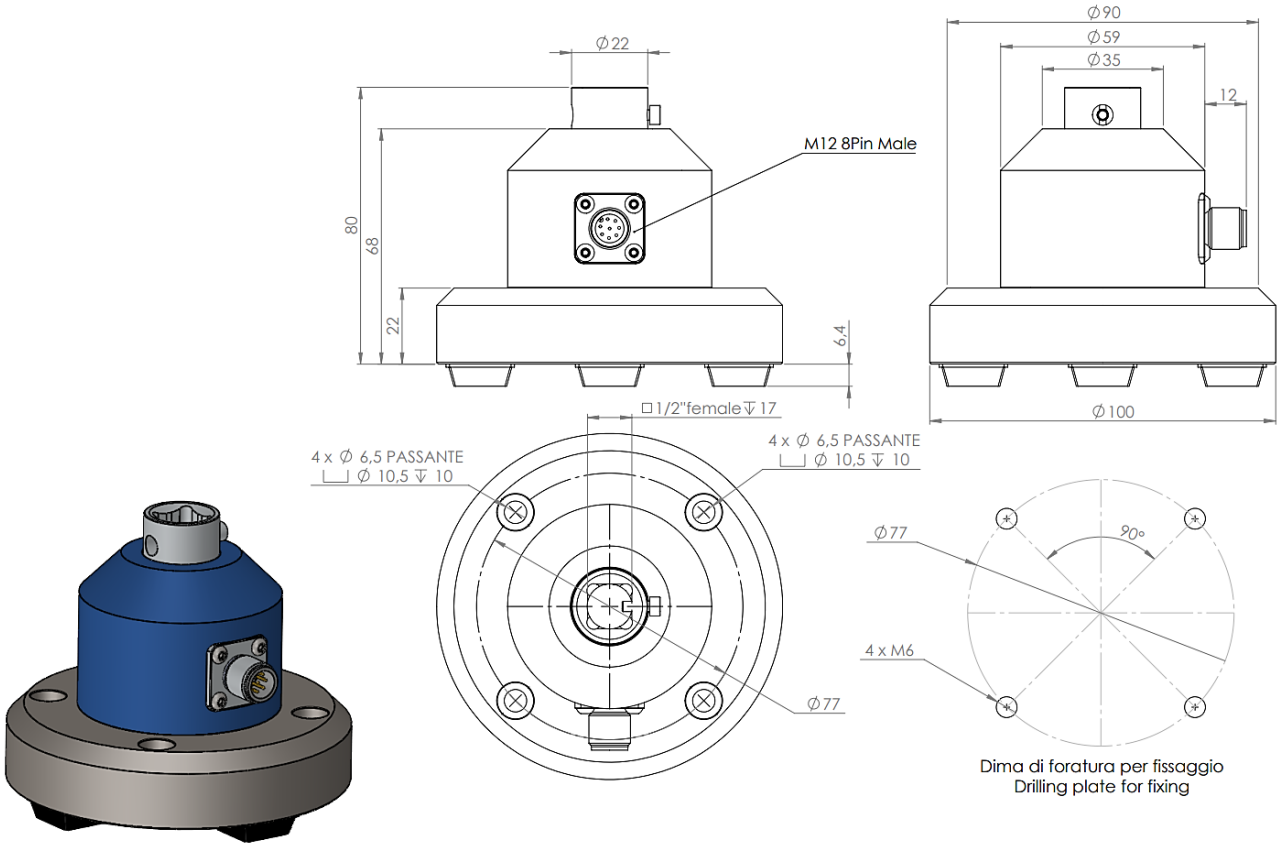

Joint Simulators

KTI transducers should always be used with the accompanying joint simulator when testing power tools, except when testing click-wrenches (see FIRST PEAK MODE).

Each model joint simulator is specifically designed by Kolver for optimal performance in its rated torque range. Left-hand thread models of each joint simulator are available upon request.

The joint simulator serves two very important functions:

1. It allows the torque tool to rotate and reach its target speed before encountering any load. This is critical to accurately measure the output of a torque tool. Verifying and calibrating a torque tool “statically”, without allowing for any rotation of the drive, is a common mistake and can yield results that are very non-representative of the real performance in the field.
2. It allows simulating different torque-rate joints, to match the profile of the real assembly joint where the torque tool being calibrated or verified will be used more closely. The torque rate is adjusted by rearranging the washers inside the simulator.

Securely fix the joint simulator to the KTI transducer using the provided set screw:

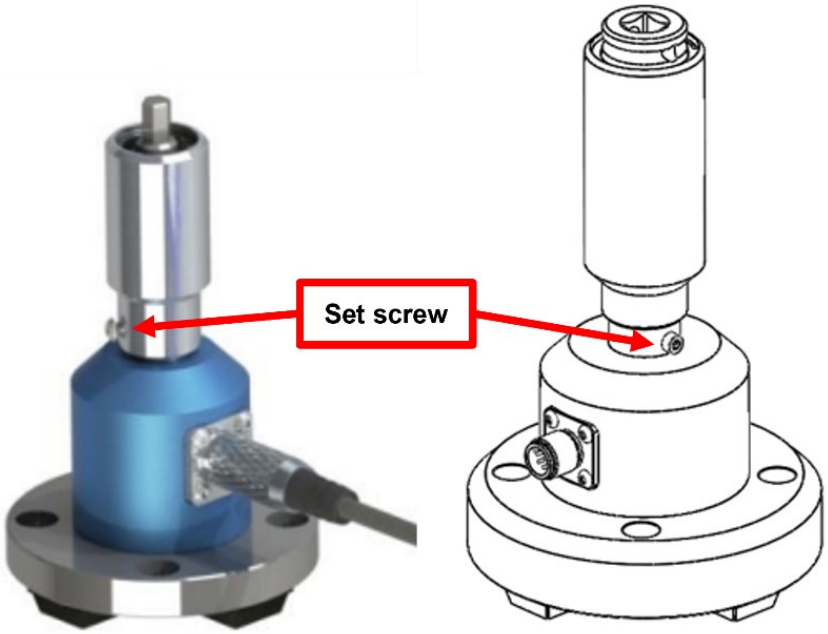

When properly installed, there should be no “play” (motion) when twisting the KTI relative to the work surface nor when twisting the housing of the joint simulator relative to the KTI transducer. Any amount of motion or wiggle could negatively affect the accuracy and precision of the torque measurement.

When performing a measurement, always reverse the joint simulator a few revolutions before initiating the tightening.

Adjusting the torque rate on joint simulators

Refer to the exploded drawings below for each model joint simulator.
Using a snap ring removal tool, disassemble the joint simulator.
Re-stack the washers same-side-up or alternating-sides to adjust the torque rate, for example:



high torque rate
hard joint

low torque rate
soft joint

Micro-torque M1.6/M2/M3 threaded hole joint simulators

Special order only, specifically designed to eliminate any rotational inertia from the measurement. This simulator simply provides a threaded hole to fasten into. Available with M1.6, M2, and M3 threaded hole.
Fastener not provided. Use washers as needed to adjust the torque rate. There are no internal washers. Recommended for precision measurements below 1 Nm.

Code	Model	Input	Output
240620	Hex 13/M1.6	Female threads **M1.6**	Hex 13mm female
240621	Hex 13/M2	Female threads **M2**	
240622	Hex 13/M3	Female threads **M3**	



M4 - 1 Nm low inertia joint simulator with spring washer

Included standard with KTI 1.

Code	Model	Max Torque	Input	Output
240640	Hex 13-1/4" M4	1 Nm	Hex 1/4“ male	Hex 13mm female

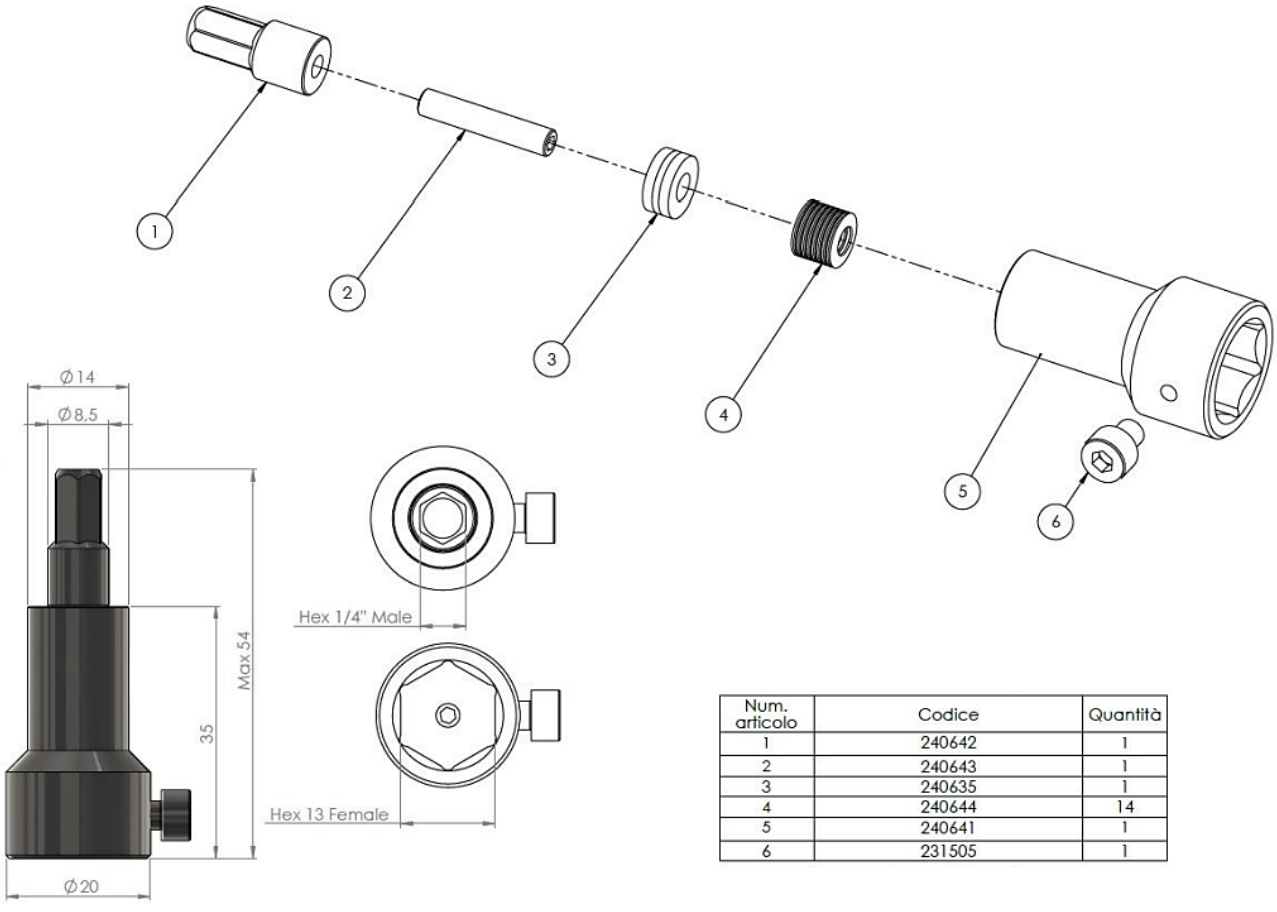

Num. articolo	Codice	Quantità
1	240642	1
2	240643	1
3	240635	1
4	240644	14
5	240641	1
6	231505	1

M6 – 5 Nm / M8 – 20 Nm joint simulator with spring washer

Included standard with KTI 5 (240600) and KTI 20 (240800).

Code	Model	Max Torque	Input	Output
240600	Hex 13-1/4" M6	5 Nm	Hex 1/4“ male	Hex 13mm female
240800	Hex 13-1/4" M8	20 Nm	Hex 1/4“ male	Hex 13mm female

240600

N°	Code	Quantity
1	240601	1
2	240602	1
3	240603	10
4	240604	1
5	240605	1

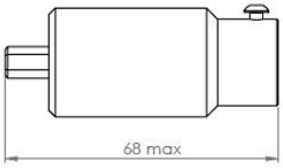

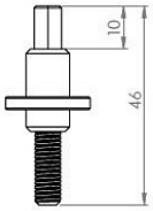

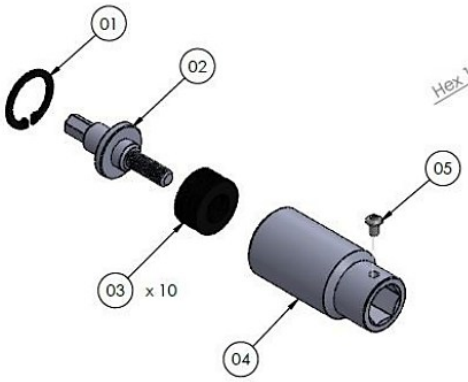

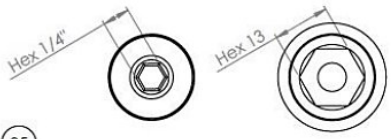

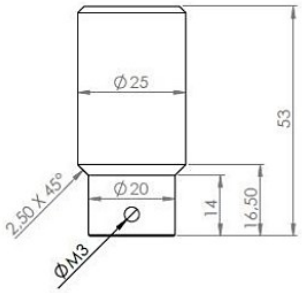

240800

N°	Code	Quantity
1	240801	1
2	240802	1
3	240803	14
4	240804	1
5	240605	1

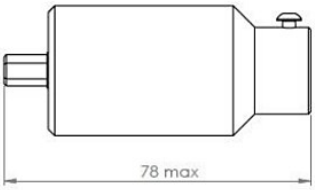

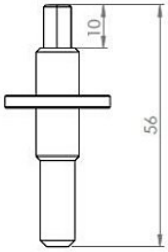

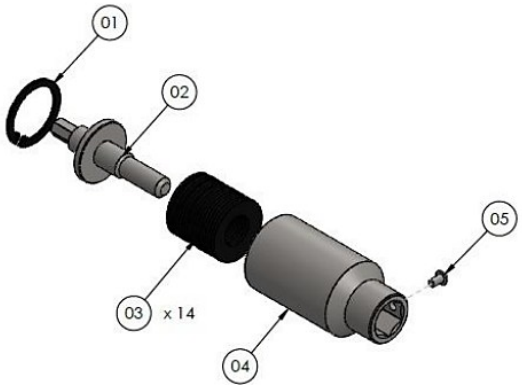

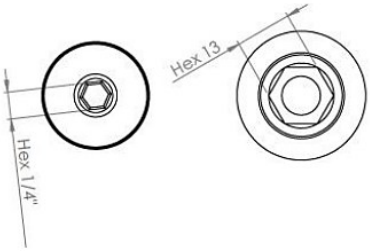

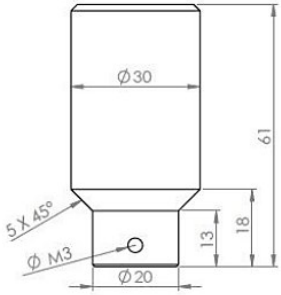

M12 – 50 Nm / M12 - 100 Nm joint simulator with spring washer

Included standard with KTI 50 and KTI 100

Code	Model	Max Torque	Input	Output
240901	3/8″ M12	50 Nm	Sq 3/8″ female	Sq 3/8″ male
240902	1/2″ M12	100 Nm	Sq 1/2″ female	Sq 1/2" male

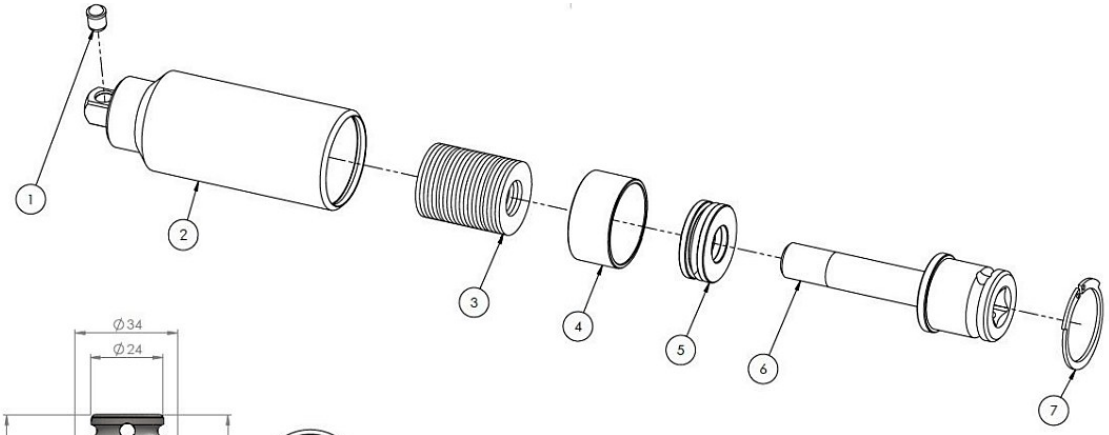

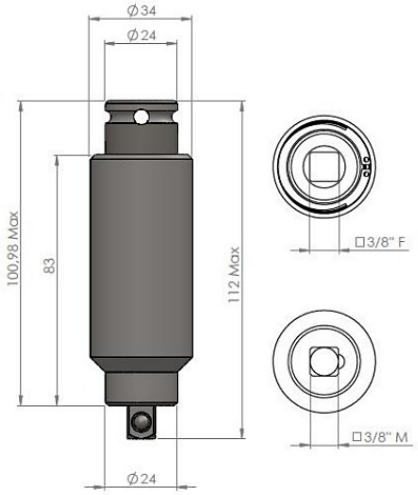

240901

Num. articolo	Codice	Quantità
1	800511	1
2	240815	1
3	240803	19
4	240807	1
5	240808	1
6	240816	1
7	240827	1

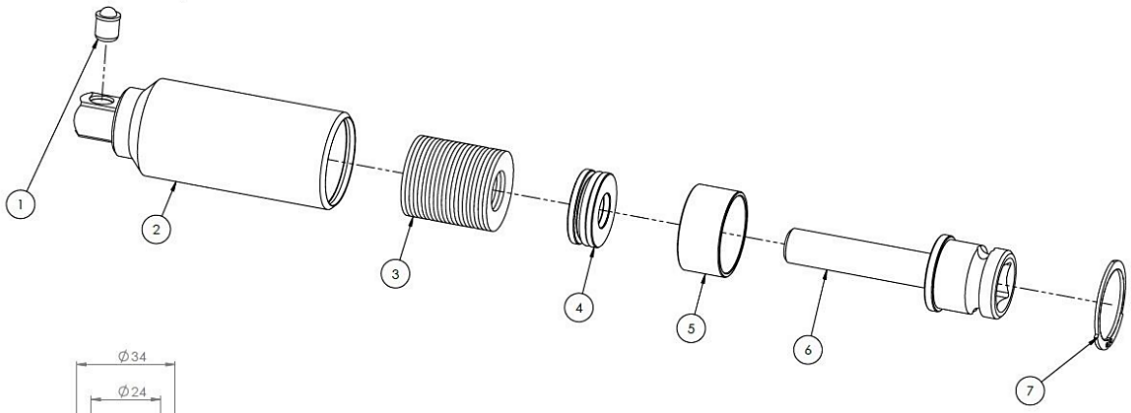

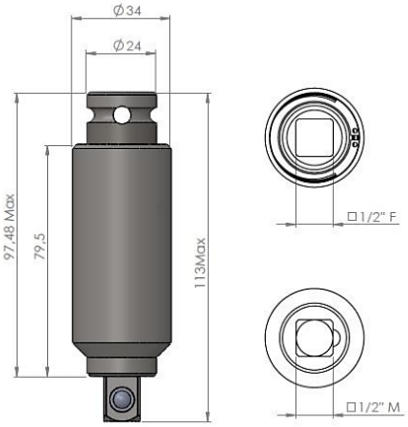

240902

Num. articolo	Codice	Quantità
1	800512	1
2	240825	1
3	240828	19
4	240808	1
5	240807	1
6	240826	1
7	240827	1

KTEI transducers

With KTE rotary transducers, you can measure and analyze the torque curve of the real assembly joint. This is useful when you want to verify and calibrate a torque tool on the real assembly joint, and/or when analyzing the characteristics of a new assembly joint.

Simply connect the input side of the KTE transducer to the bit-holder of your torque tool and install the screwdriving bit on the output side of the KTE transducer.

Note: KTE rotary transducers are not suitable to calibrate clutch-type torque tools, they are only suitable for electronic torque control tools (current control and transducer type) as well as non-powered screwdrivers or wrenches.

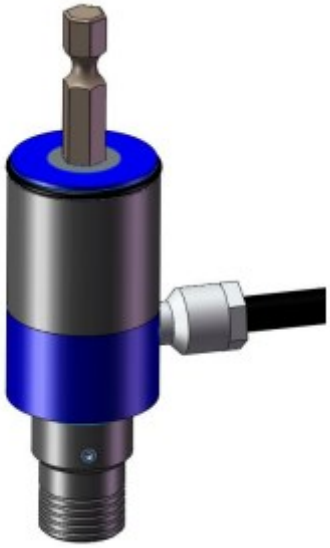

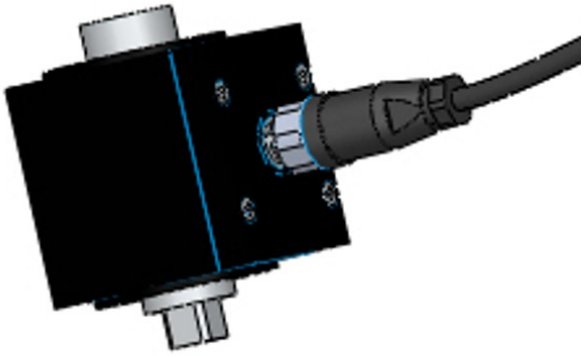

Accessories

DOCK-08

Part number: **020053**
This accessory allows you to connect up to four transducers to one K-TESTER reader unit.
See program parameter DOCK TRANSDUCER.

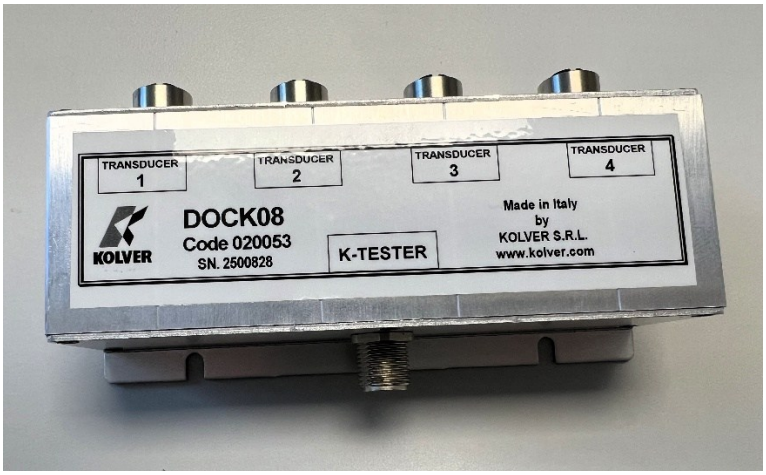

Test Station

Part number: **010722**
This kit features a vertical slide, screwdriver clamp, and adjustable pin locators to secure a KTI static transducer or a KTEI rotary transducer with its joint simulator holder.
This station absorbs all reaction torque without requiring to be itself bolted down to the workbench, and provides a convenient setup for precise calibration.

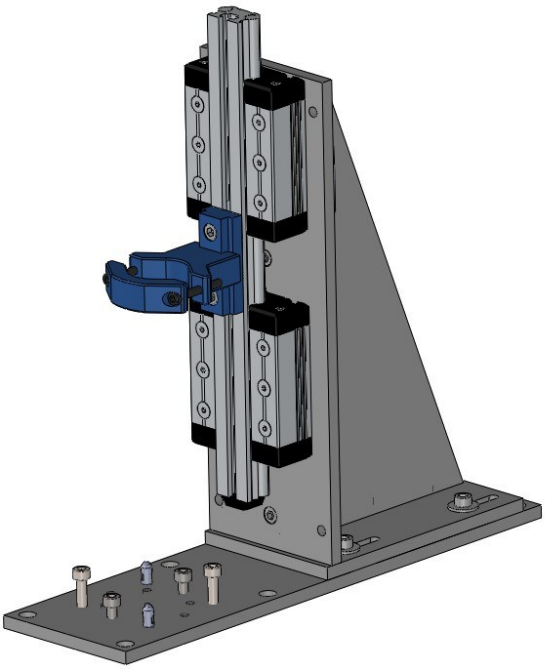

2 and 4 position transducer holders

Part numbers: **010720** (2-positions) and **010721** (4-positions)
These plates can accommodate two or four KTI transducers or joint simulator holders. The plates must be clamped or bolted to the workbench to safely absorb the reaction torque.

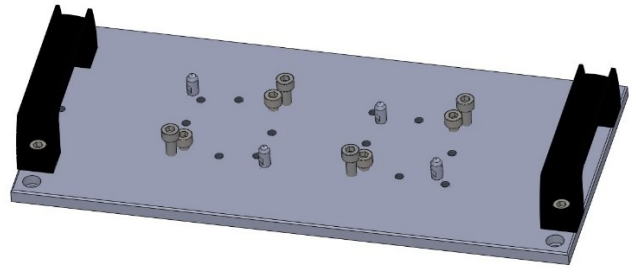

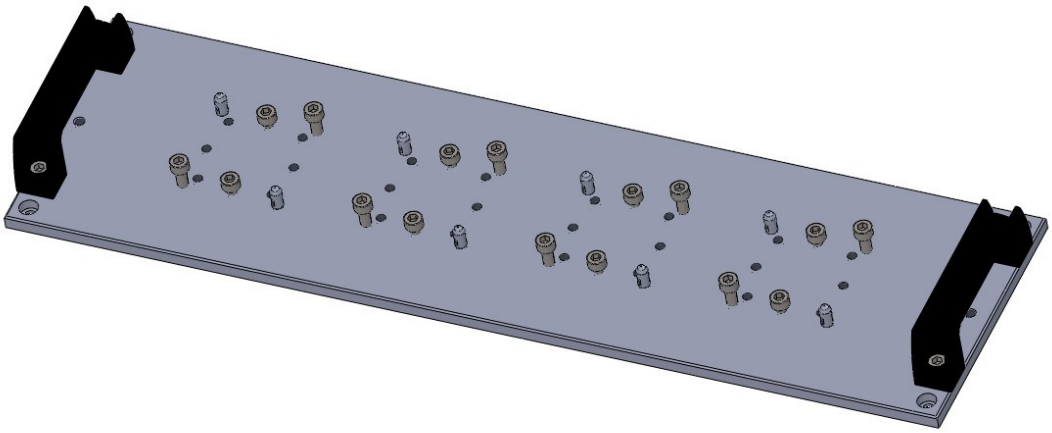

Joint simulator holders for KTEI rotary transducers

Part numbers: **240920** (for hex-F joint simulators), **240922** (for 3/8" square-M joint simulators), **240925** (M12 female thread), **240926** (M16 female thread)
These holders allow securing a joint simulator to any of the plates above, or to a work surface. This in turn allows using a rotary transducer as if it were a stationary transducer.

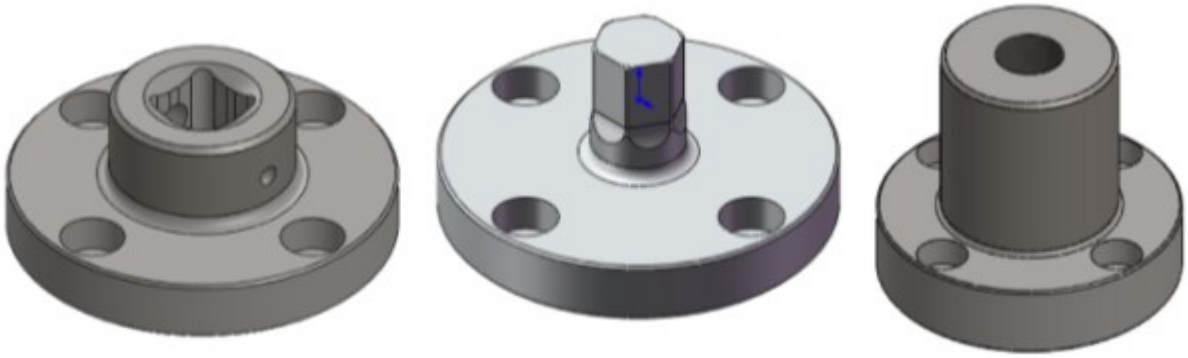

90 degree bracket

Part number **240921**, allows mounting KTI transducers and joint simulator holders horizontally.
Used to hold the transducer horizontally, for loading with weight calibration wheels, or to test tools horizontally.

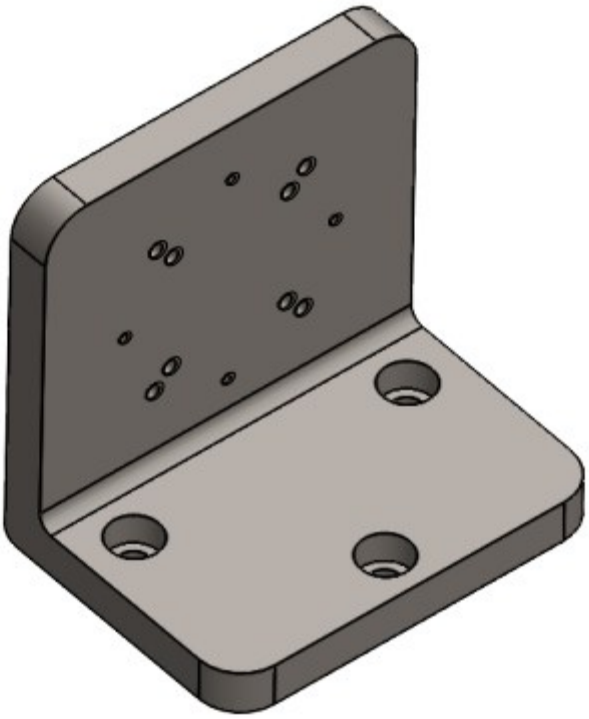

QUICK START

Connect the KTI transducer or the KTEI board and KTE rotary transducer.

Turn the unit on through the on/off switch on the lower panel.

The K-TESTER will recognize the KTI or KTEI transducer connected and load the associated calibration information.

Note: every time a KTI or KTEI transducer is powered on, it performs a zero-point self-calibration. It is therefore imperative that there are no torque, no forces, and no bending moments or physical stresses applied to the transducer while it is powering up. External loads can be caused for example by objects (screwdrivers) or hands resting on the KTI or KTEI transducer. Having a torque/load applied during power up can result in incorrect torque readings until the next time the unit powered cycled off/on. The power up phase of the transducer only lasts a few seconds.

The unit will operate in either of two modes: FREE-RUN or TARGET-TORQUE.

In FREE-RUN mode, the unit will only display the instantaneous torque reading.
In TARGET-TORQUE mode, the unit will display the peak torque measured during a measurement interval defined in the program settings.

In most cases, TARGET-TORQUE mode is the preferred working mode.

To select the operating mode: tap the menu button on the top-right corner of the screen to enter the main menu, tap the “general settings” tile on the bottom right corner, and enable or disable the first setting in the list “TARGET TORQUE MODE”.
In this menu you can also change the measurement units.

For TARGET TORQUE mode, you will need to adjust a few simple settings.
Navigate to the main menu and tap the PROGRAMS tile.
Select the desired program number (1 to 200).
Select the desired program number (1 to 200).
Enter the desired MAX/MIN limits and the TARGET torque for the measurement.
Tap the checkmark at the top-right corner of the screen to save the settings and return to the main screen to take your measurements.

For more details on each setting, refer to the rest of this manual.

OPERATING THE K-TESTER

Main Screen – FREE-RUN mode

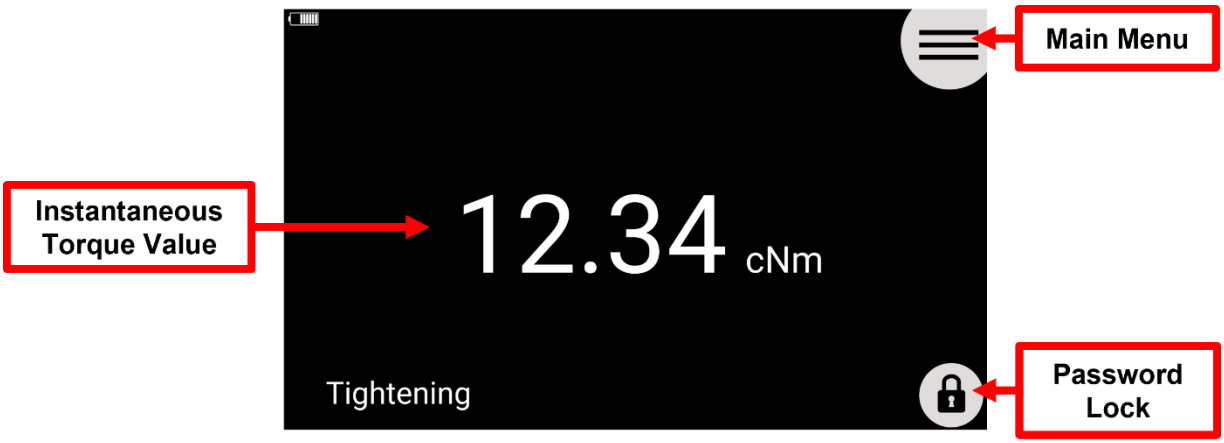

Main Screen – TARGET-TORQUE mode

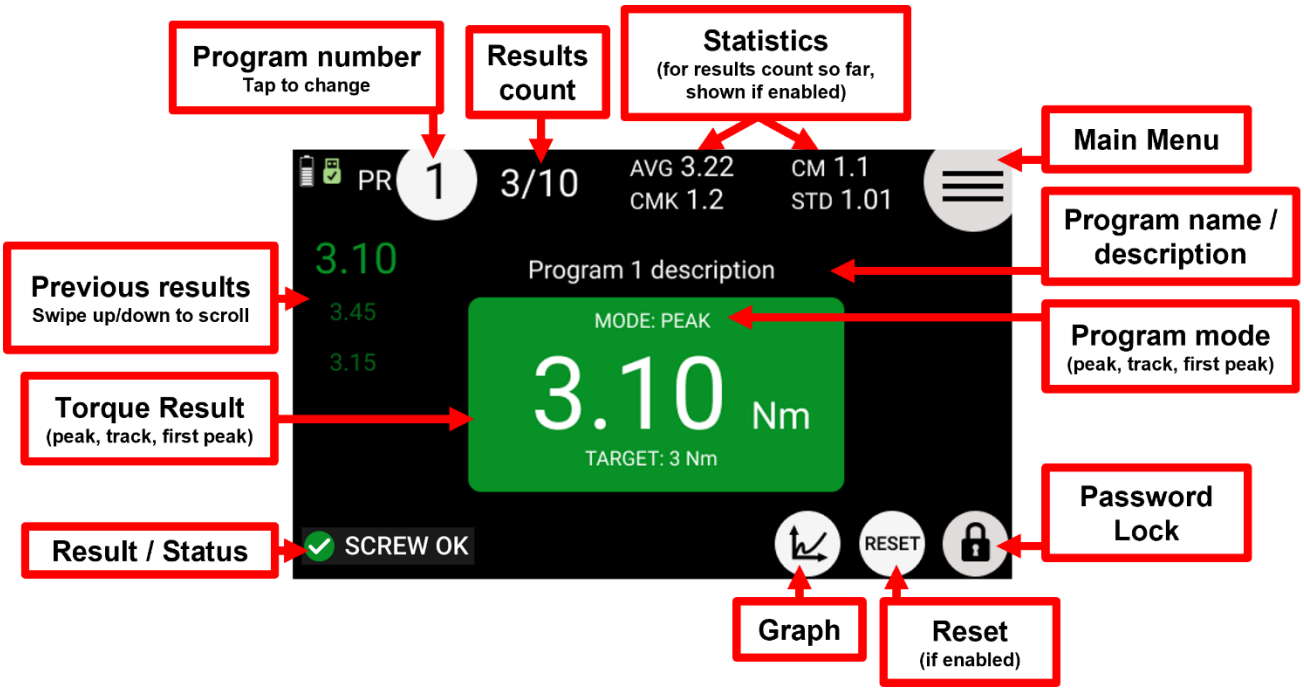

Main Screen – GRAPH

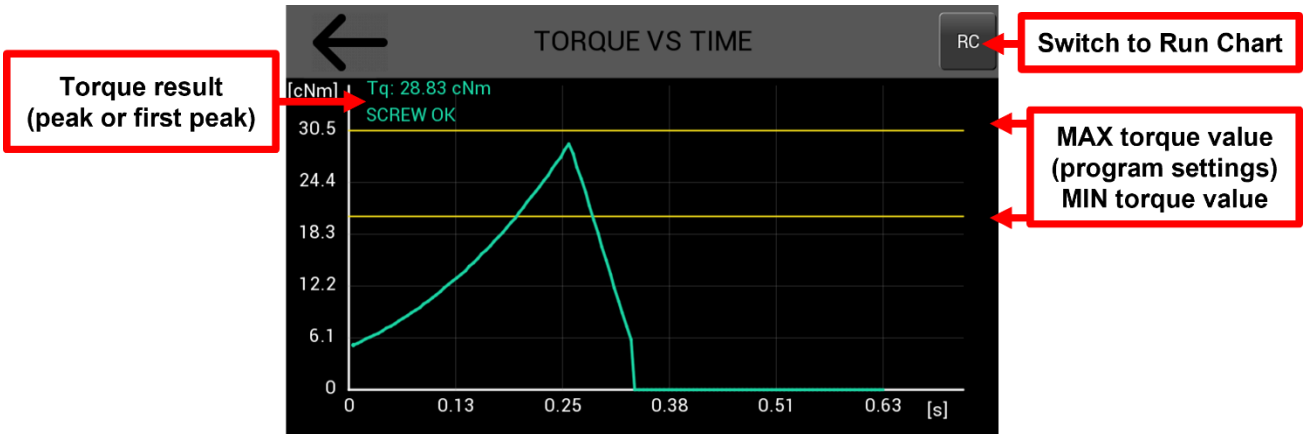

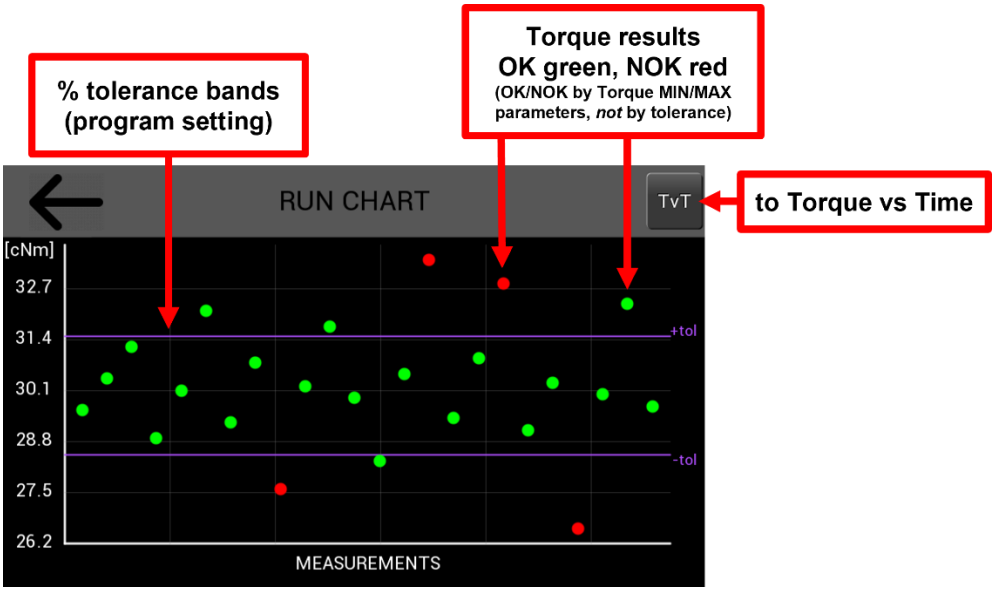

Reports Screen

Access the reports from the main menu

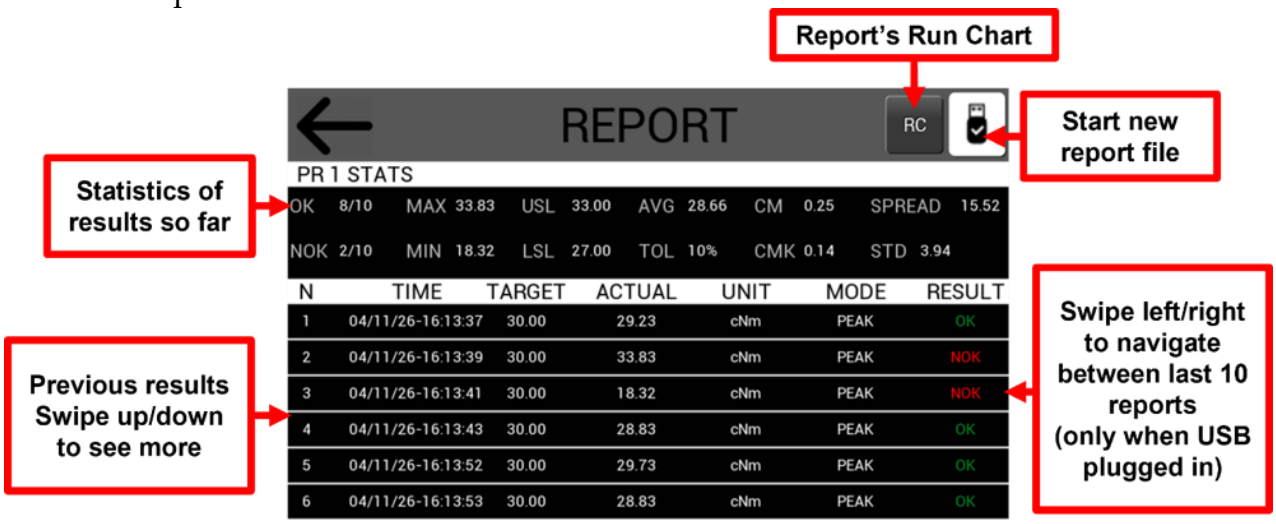

Connecting a barcode scanner

With a barcode scanner, you can select a program by scanning its associated barcode, and/or you can associate a barcode with the measurement data to be recorded.

The K-TESTER is compatible with RS-232 capable barcode scanners (such as Kolver P/N 020050 and 020051), and with USB scanners via Kolver's USB-to-RS232 adapter P/N 010415.

Any barcode type supported by the scanner will work with the K-TESTER.

Connecting serial barcode scanner

Connect the barcode scanner to the CN2 connector of the K-TESTER.
If using a 2D barcode scanner such as Kolver P/N 020051, you must also connect the external power supply included with the scanner.

The barcode scanner should be configured with the following serial connection parameters:

RS232 – 9600 baud – 8 data bits – 1 stop bit – no parity

For Kolver P/N 020051, this is done by scanning the included configuration barcode.
For other scanners, refer to their user manual.

Connecting a USB barcode scanner

Connect the barcode scanner to the USB port of the Kolver adapter P/N 010415.
Connect the adapter to the CN2 connector of the K-TESTER using the serial "null modem" cable provided with the adapter.
Finally, connect the power cord for the adapter 010415.

Use

To register a barcode to a program for program recall, tap the barcode box in the Programs menu.

To activate a barcode mode, navigate to the General Settings menu and select BARCODE MODE from one of the following:

OFF: disables barcode functionality
ON SN: scan a barcode and the tightening data for the current program will contain the scanned barcode
ON PROG: scan a barcode and the program number to which that barcode has been previously registered (via the Programs menu) will be loaded
ON SN+PROG: the K-TESTER will prompt for two consecutive barcode scans: first the SN mode scan and then the PROG mode scan

CONFIGURING THE K-TESTER

MAIN MENU

From the main screen, enter the main menu by tapping on the ☰ button on the top right.

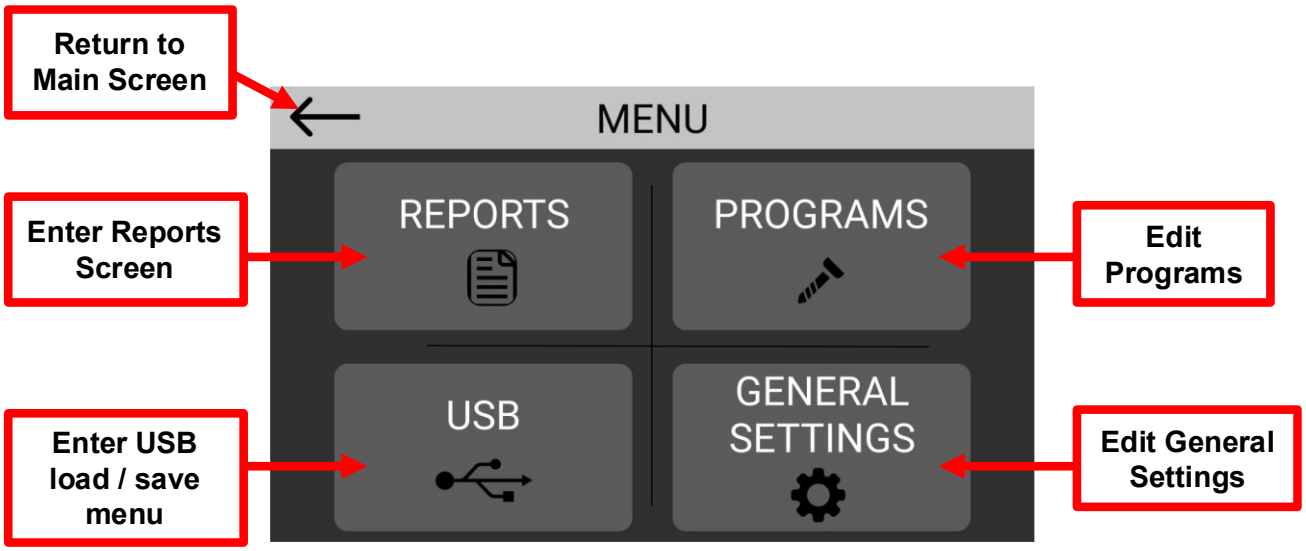

GENERAL SETTINGS

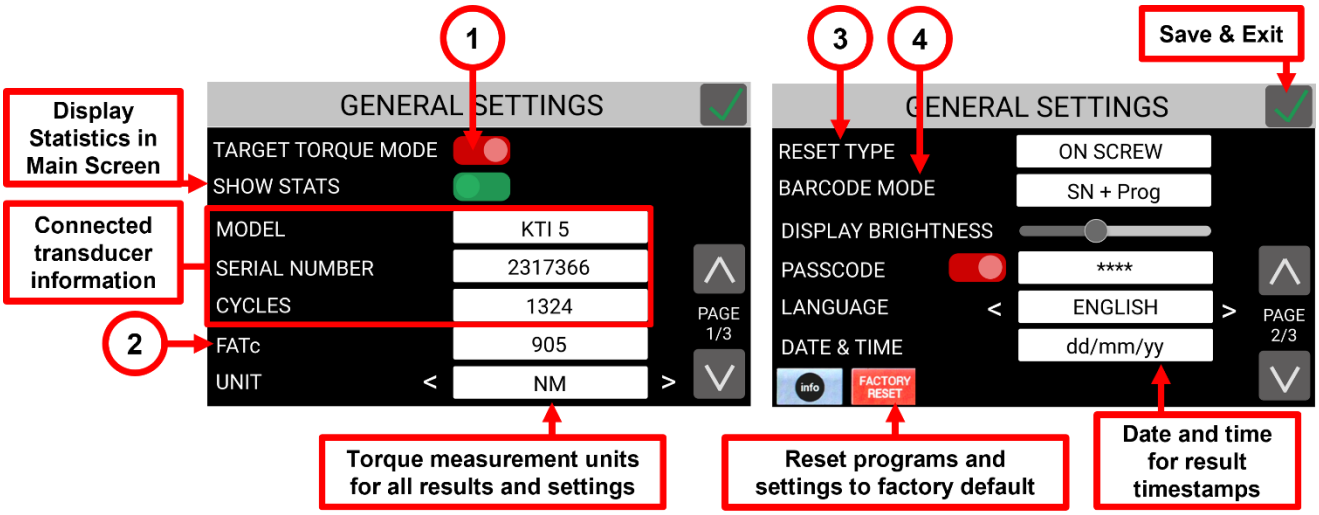

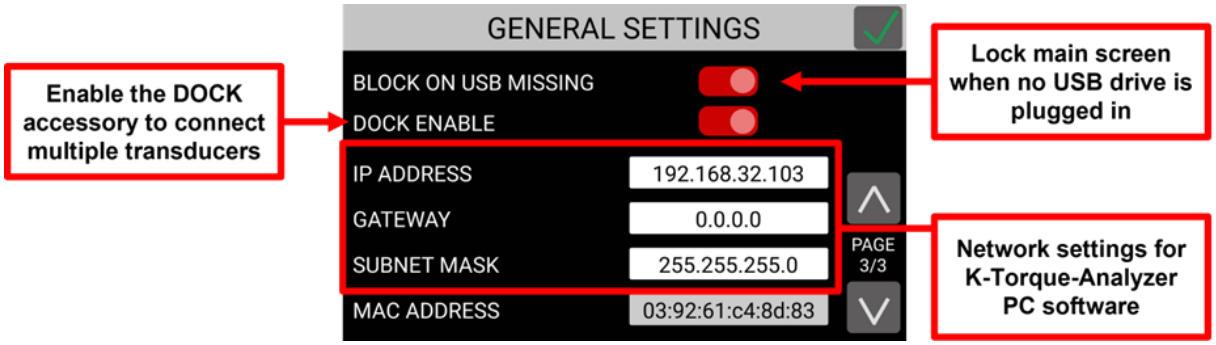

(1) TARGET TORQUE MODE

On: activates "target torque" operating mode. Program settings, reports, and statistics are active in this mode.

Off: activates "free running" mode. In this mode, programs are disabled and the main screen only shows the instantaneous torque value. Reports and statistics are disabled.

(2) FATc (calibration factor)

FATc is the calibration factor of the connected transducer.
Tap the edit box to enter the calibration factor edit screen.
Calibration should only be performed by qualified personnel. Calibration instructions are available separately (contact Kolver).

(3) RESET TYPE

Configures or disables the RESET button on the main screen.
OFF: no reset button
ON SCREW: tapping the reset button deletes the last measurement and decreases the screw count by one
ON PROG: tapping the reset button deletes all measurement data of the current program so far and resets the screw count to zero

(4) BARCODE MODE

Configures or disables barcode functionality. See Connecting a barcode scanner.

PROGRAMS

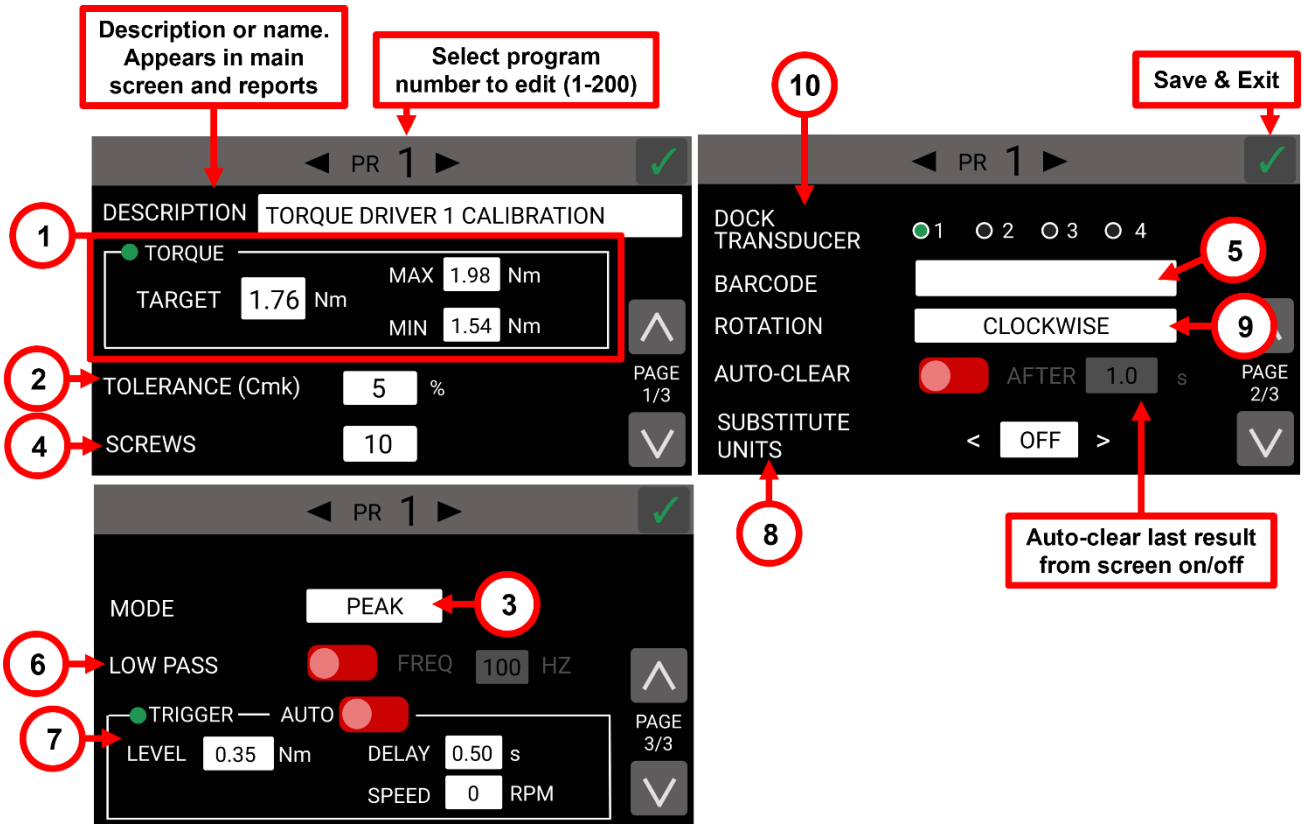

(1) TORQUE TARGET, MIN, MAX

TARGET: the desired target torque for the tool being tested or calibrated. This value is also used to calculate the Cm and Cmk six-sigma statistics.
MIN: the minimum torque. If no torque values within the measurement are above this value, the result is considered "NOK" (bad/red/no pass).
MAX: the maximum torque. If any torque value within the measurement exceeds this value, the result is considered "NOK" (bad/red/no pass).
If the peak value of the measurement falls within the MIN and MAX values, the result is considered "OK" (good/green/pass).

(2) TOLERANCE (Cmk)

This value affects the Cm and Cmk (coefficient of machine capability, six-sigma measure) statistics. For the same set of torque values, a larger tolerance will yield a higher Cm and Cmk value. This value has no impact on whether the torque measurement is considered "OK" or "NOK".
The tolerance bands are shown on the "Run Chart" screen.

(3) MODE

PEAK: during and after the measurement, the peak value so far is the value displayed on the screen. This is the most commonly used mode for checking torque tools.

TRACK: during the measurement, the instantaneous torque is always displayed on the screen. Typically used for calibrating the torque transducer with a static load. Final torque results will always be zero in track mode.

FIRST PEAK: the first peak of a measurement becomes the torque result for this measurement. This mode is used for click wrenches. The highest peak torque (including after the first peak) value is shown under the main torque result and will be highlighted in red if it exceeds the TORQUE MAX parameter, but the measurement will still be considered OK as long as the first peak meets the MIN/MAX parameters.
Note: for best measurement accuracy with click wrenches, measure directly on the static KTI transducer using a 13mm hex socket (KTI1-5-20), or a square drive (KTI50-100-250).

(4) SCREWS

This is the number of measurements of this program. The statistics are calculated and refreshed with every measurement, up and until the value of "SCREWS". Starting a new measurement after reaching the number of "SCREWS" will restart the statistics and clear the current report.
Therefore, users should match this value to the number of measurements that they intend to perform when calibrating a tool, if they want to see statistics calculated over the desired set of measurements.

(5) BARCODE

Tap to assign a barcode to this program. See Connecting a barcode scanner.

(6) LOW PASS

The transducer samples the torque 15,000 times a second (15 kHz). The high-frequency torque data is digitally filtered through a low-pass filter.
With this option, you can decrease the frequency of the filter to obtain smoother torque curves. Using a lower filtering frequency can be appropriate when measuring torques near the low end of the transducer torque range, to smooth out noise in the signal, or during calibration of the transducer in TRACK mode under a static load.
Turn **ON** and select a lower frequency to obtain smoother curves. Not available in FIRST PEAK mode.
Turn **OFF** to use the default filter (highest frequency). If unsure, leave this option **OFF**.

(7) TRIGGER

These settings define the beginning and end points of a measurement.

AUTO: choose auto to automatically select appropriate settings based on the transducer model connected.

LEVEL: the minimum torque above which a new measurement begins. A good starting point for this value is the minimum nominal torque of the transducer model to be used with this program. This value can be adjusted lower or higher as needed.
Too low a value might generate unintended measurements when coupling the tool to the transducer and/or general handling of the transducer.
Too high a value might result in missing important features at the beginning of the tightening (this is mainly relevant for joint analysis with rotary transducers).

DELAY: the amount of time that the torque readings must remain below the **LEVEL** value, for the measurement to be considered finished. 0.1 seconds by default. If the electric screwdriver being calibrated uses a two-speed approach, for example KOLVER KDS and PLUTO series screwdrivers, it is recommended to increase this value to 0.3 seconds to ensure that the entire tightening cycle is captured in a single measurement.

SPEED: this is a future setting for torque & angle rotary transducers.

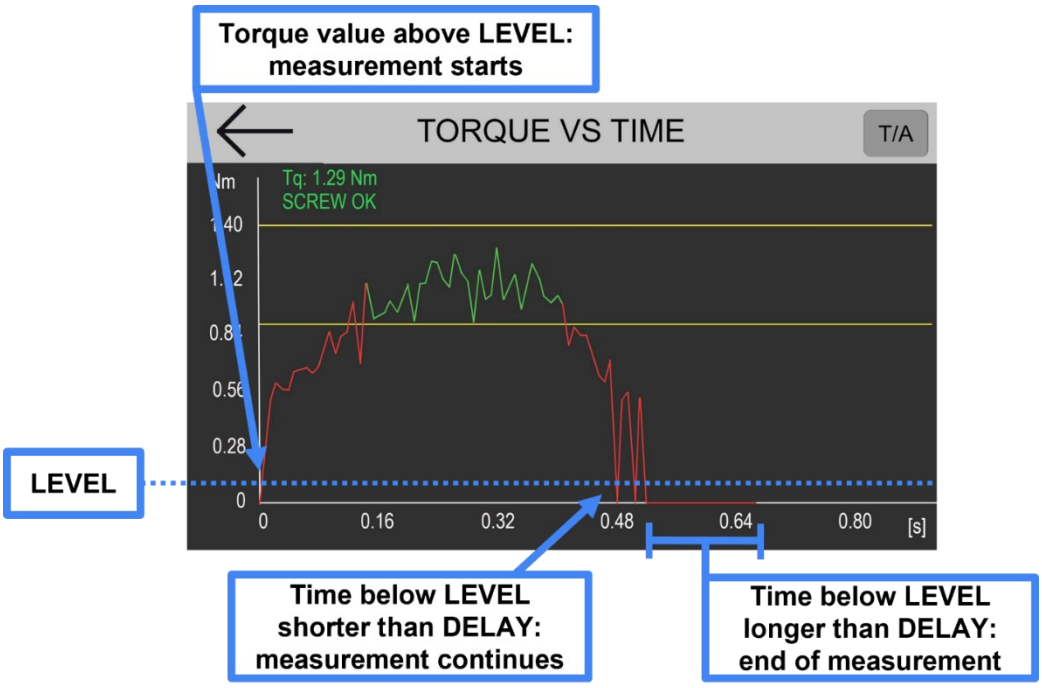

(8) SUBSTITUTE UNITS

Select a different torque measurement unit for this program only.
If OFF, the measurement units selected in the “General Settings” menu will be used..

(9) ROTATION

The torque measurement direction (clockwise or counter clockwise)

(10) DOCK TRANSDUCER

If using the DOCK accessory to connect multiple transducers to the K-TESTER unit, first activate the “DOCK ENABLE” option in the “General Settings” menu, and then you will be able to select here the transducer to be used with this program.

USB

The USB menu allows saving all program and setting parameters to a USB drive, loading previously saved programs and settings (replacing current settings), and updating the firmware of the K-TESTER from a Kolver-provided USB update file.

The filesystem of the USB drive must be FAT32. The 8gb Kolver-provided USB drive included with the K-TESTER is already formatted FAT32, however any USB drive can easily be re-formatted to FAT32 from a PC or Mac (right click -> format -> select FAT32 for filesystem and "quick format". Note: all data and contents in the USB drive is erased when formatting).

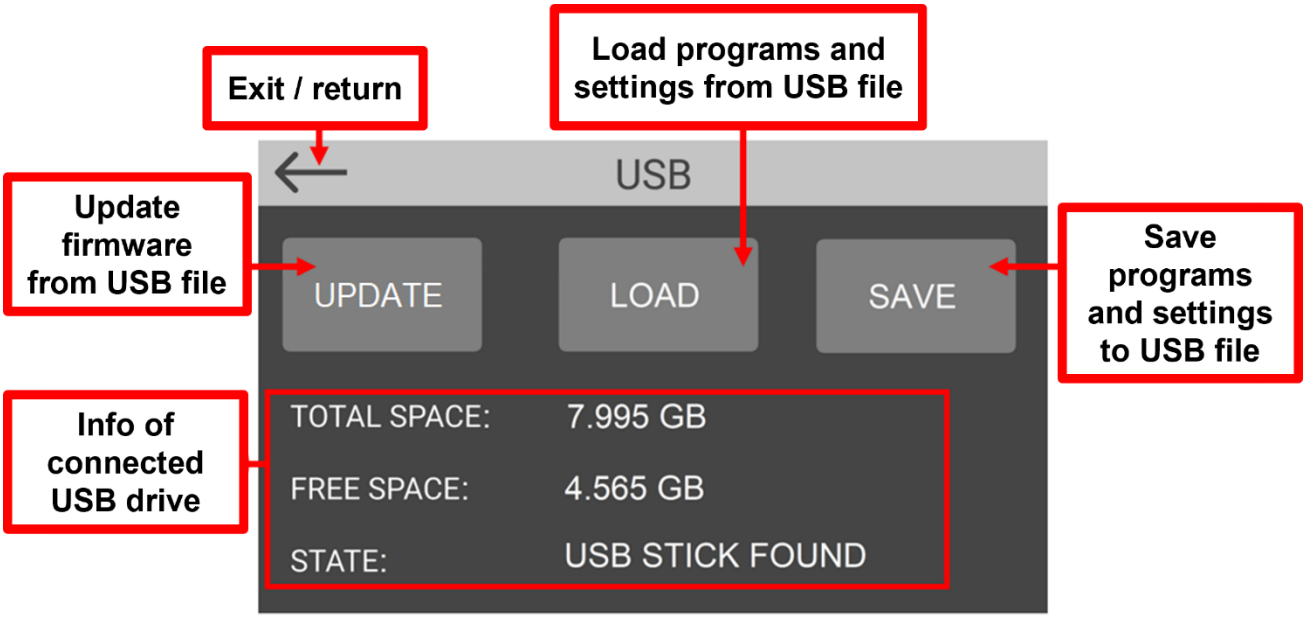

MODBUS TCP

The K-TESTER unit provides a Modbus TCP server at the IP address configured in the GENERAL SETTINGS menu and TCP port 502 (the standard TCP port for Modbus TCP).

The following holding register is available for reading and writing:

HOLDING REGISTERS (Modbus FC: 0x03, 0x06, 0x10)			
REGISTER NAME	**REGISTER SPAN**	**BASE-0 ADDRESS**	**CONTENTS**
Program Number	1	0	The program number currently selected

The following input registers are available for reading:

INPUT REGISTERS (Modbus FC: 0x04)			
REGISTER NAME	**REGISTER SPAN**	**BASE-0 ADDRESS**	**CONTENTS**
Firmware version	5	0	ASCII string with the firmware version of the K-TESTER
Transducer model	8	5	ASCII string with the model of the connected transducer
Transducer serial number	8	13	ASCII string with the serial number of the connected transducer
Transducer firmware version	8	21	ASCII string with the firmware version of the connected transducer
Tightening ID	2	29	32-bit value, a unique number identifying a measurement result. The number resets to zero when rebooting the K-TESTER device.
Torque result	2	31	32-bit value, the final torque reported in mNm * 100. For example, 1.02 Nm would be reported as 102000
Status code	1	33	A status code indicating the current state of the K-TESTER.
Measurement count	1	34	The number of OK measurements in the currently running program up to and including this one
Statistics: Average	2	35	Float value (floating point number, 32-bit). A calculated statistical metric, if available, for the measurements in the currently running program, up to and including the last measurements. Some statistics cannot be calculated until at least 3 measurements have been performed.
Statistics: Cm	2	37	
Statistics: Cmk	2	39	
Statistics: Std	2	41	
Statistics: LSL	2	43	
Statistics: USL	2	45	
Statistics: Spread	2	47	

*the possible status codes are:

Code	Status
0	No transducer connected
1	Ready
2	Measurement in progress, clockwise
3	Measurement in progress, counter-clockwise
4	Measurement OK
5	Measurement NOK, under torque min
6	Measurement NOK, over torque max

OPEN PROTOCOL

The K-TESTER provides an Open Protocol server at the IP address configured in the GENERAL SETTINGS menu and TCP port 4545 (the standard TCP port for Open Protocol). One client at a time can be connected.

The Open Protocol parameter sets (Pset) are the programs of the K-TESTER (1 to 200). The batch size is the SCREWS value of the program and the batch counter is the number of measurements of the current program.

The following MIDs are supported:

MID	DESCRIPTION	REVISIONS
0001 / 0002	Communication start / acknowledge	1 – 6
0003	Communication stop	1
0004 / 0005	Command error / Command accepted	1
0006	Application data message request (MID 0010, 0012)	1
0008 / 0009	Application data message subscription / unsubscribe (MID 0015, 0052, 0061, 0900)	1
0010 / 0011	Parameter set ID upload request / reply	1 – 3
0012 / 0013	Parameter set data upload request / reply	1 – 2
0014 – 0017	Parameter set selected subscribe / data / acknowledge / unsubscribe	1 – 2
0018	Select parameter set	1
0019	Set parameter set batch size	1
0020	Reset parameter set batch counter	1
0040 / 0041	Tool data upload request / reply	1 – 5
0042 / 0043	Disable tool / Enable tool	1
0050	Vehicle ID number download request	1
0051 – 0054	Vehicle ID number subscribe / data / acknowledge / unsubscribe	1 – 2
0060 – 0063	Last tightening result data subscribe / data / acknowledge / unsubscribe	1 – 6

MID	DESCRIPTION	REVISIONS
0080 / 0081	Time upload request / reply	1
0082	Set time	1
0150	Identifier download request	1
0900	Trace curve data (torque)	1
9999	Keep alive	1

Notes:

- MID 0018, 0019 and 0020 are refused while a measurement is in progress or when the main screen is not displayed. MID 0018 is also refused with BARCODE MODE ON PROG and ON SN+PROG, where the program is selected by barcode.
- MID 0050 and 0150 are accepted only when the K-TESTER is waiting for a barcode, according to the BARCODE MODE. The vehicle ID number sent to the client (MID 0052 and 0061) is the SN barcode with BARCODE MODE ON SN and ON SN+PROG, and the program barcode with ON PROG.
- MID 0042: the K-TESTER keeps measuring, but the results are not sent to the client until MID 0043 is received or the client disconnects.
- MID 0061: the torque is the result of the measurement (the first peak with MODE FIRST PEAK).
- MID 0900: only the torque trace is available (no angle trace).

CN4 I/O

Supply 12 to 24 VDC to PIN 9, with negative/ground on PIN 11 to activate the outputs:

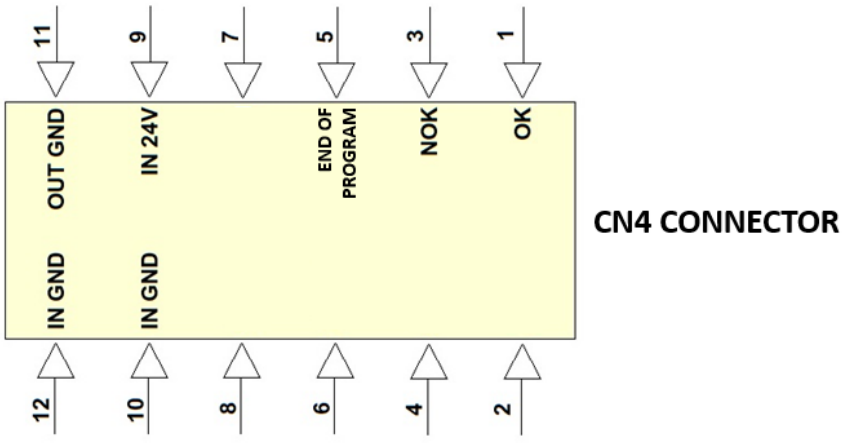

Pin 1: (OK) indicates the tightening was completed within the program parameters

Pin 2: (NOK) indicates the tightening was completed outside the program parameters

Pin 3: (End of Program) when last OK tightening was the Nth OK tightening, where N is the number of screws in the current program

K-TORQUE-ANALYZER PC SOFTWARE

K-TORQUE ANALYZER is the companion software for managing the K-TESTER and visualizing graphs & reports from a tablet/pc connected via ethernet.
Download from www.kolver.com

The software provides:

- real-time displaying and archiving of data from the K-TESTER
- analysis and comparison of tightening operations and torque data
- reporting
- managing device settings and programs

MENU BAR

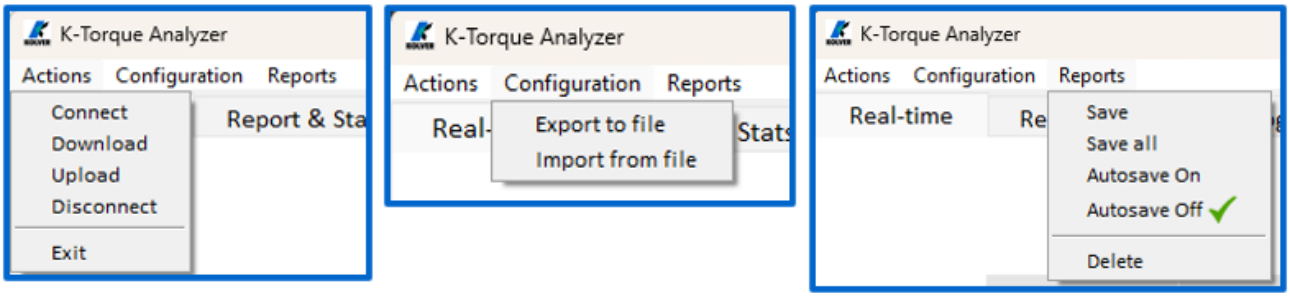

ACTIONS

- connect/disconnect from controller
- download/upload configuration from/to controller

CONFIGURATION (programs and settings)

- import from file
- export to file

REPORTS

- save last program (i.e. last batch) results to CSV
- save all results to CSV
- enable/disable autosave
- clear all results

TABS

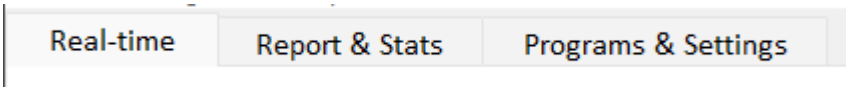

REAL TIME

Visualize the graph and results in real time
If working with **TORQUE TARGET** mode **ON**, relevant information such as min/max limit is displayed on the screen.

Right-click on graph to navigate the graph via the available functions:
_ Home: return to home view
_ Back: return to previous view
_ Forward: return to last view
_ Move: pan the view
_ Zoom: select an area to zoom
_ Save: save a picture of the graph to a file

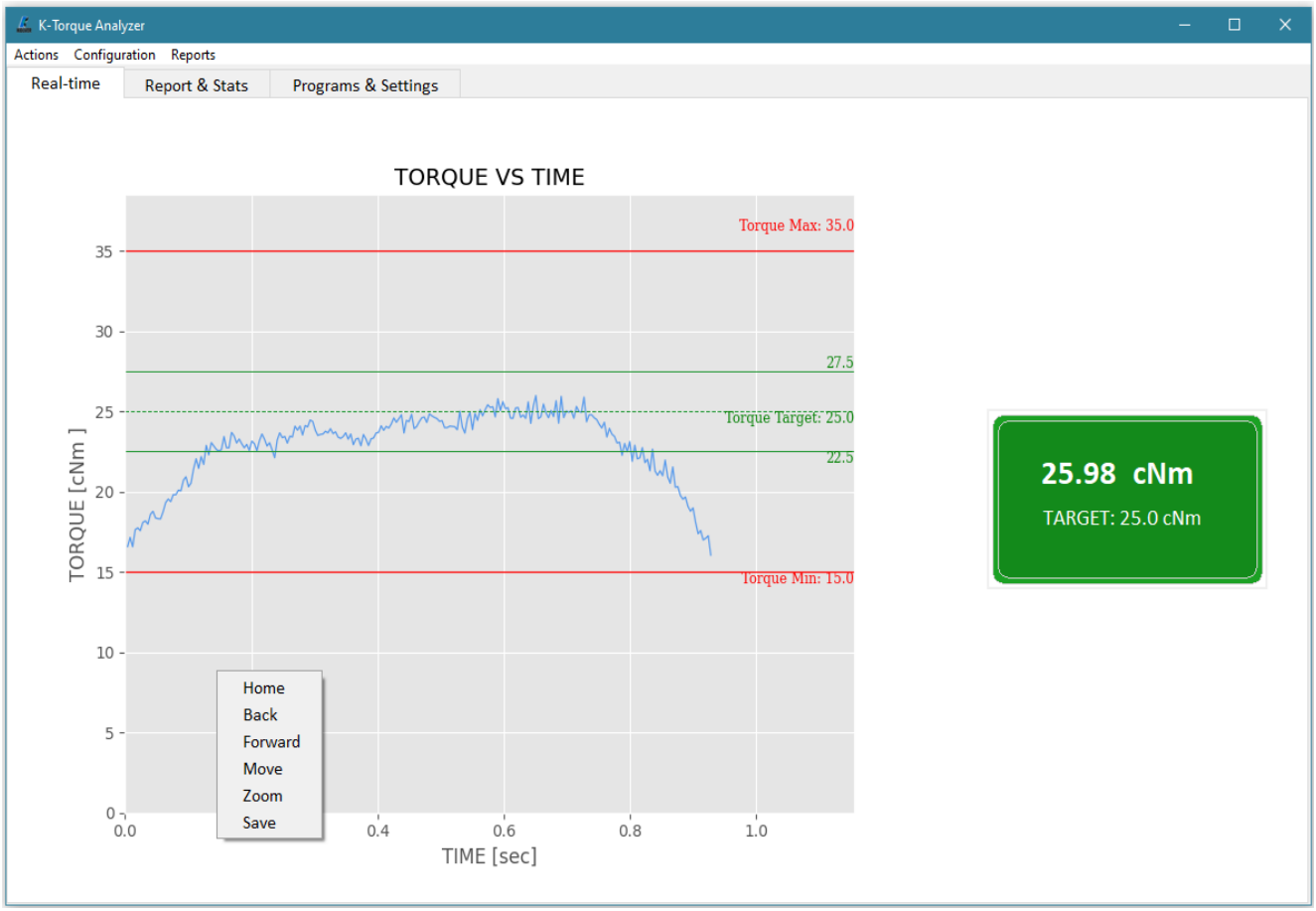

With **TORQUE TARGET** mode **OFF**, a plain graph is shown and the peak value is highlighted on the right side of the screen.

REPORTS & STATS

Review all the recorded results so far, relevant statistics such as Cm and Cmk.
Select one or more results to graph and visualize superimposed for comparison (right-click to bring up graph controls).

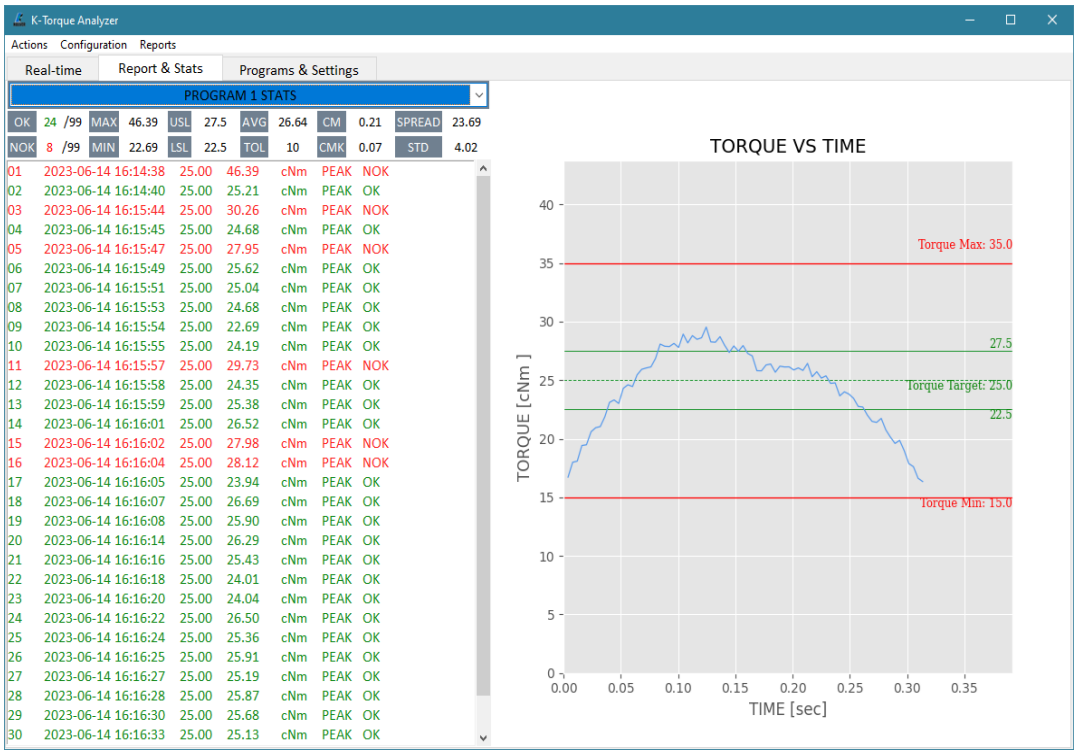

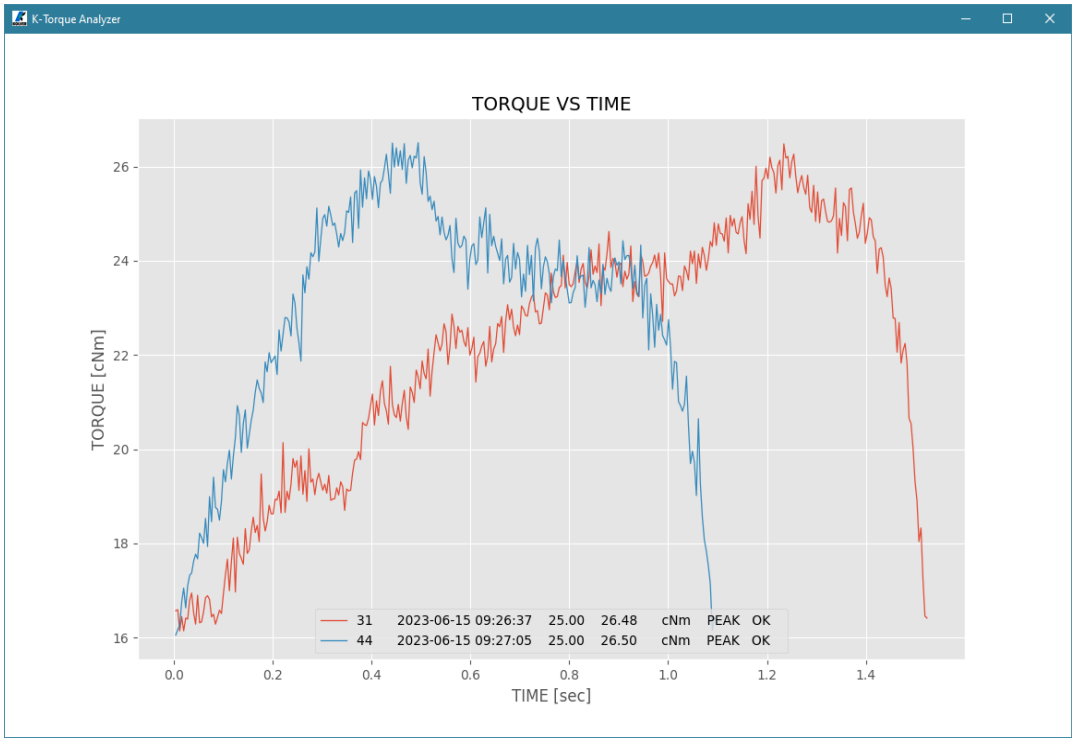

PROGRAMS & SETTINGS

View and modify all program parameters and settings.

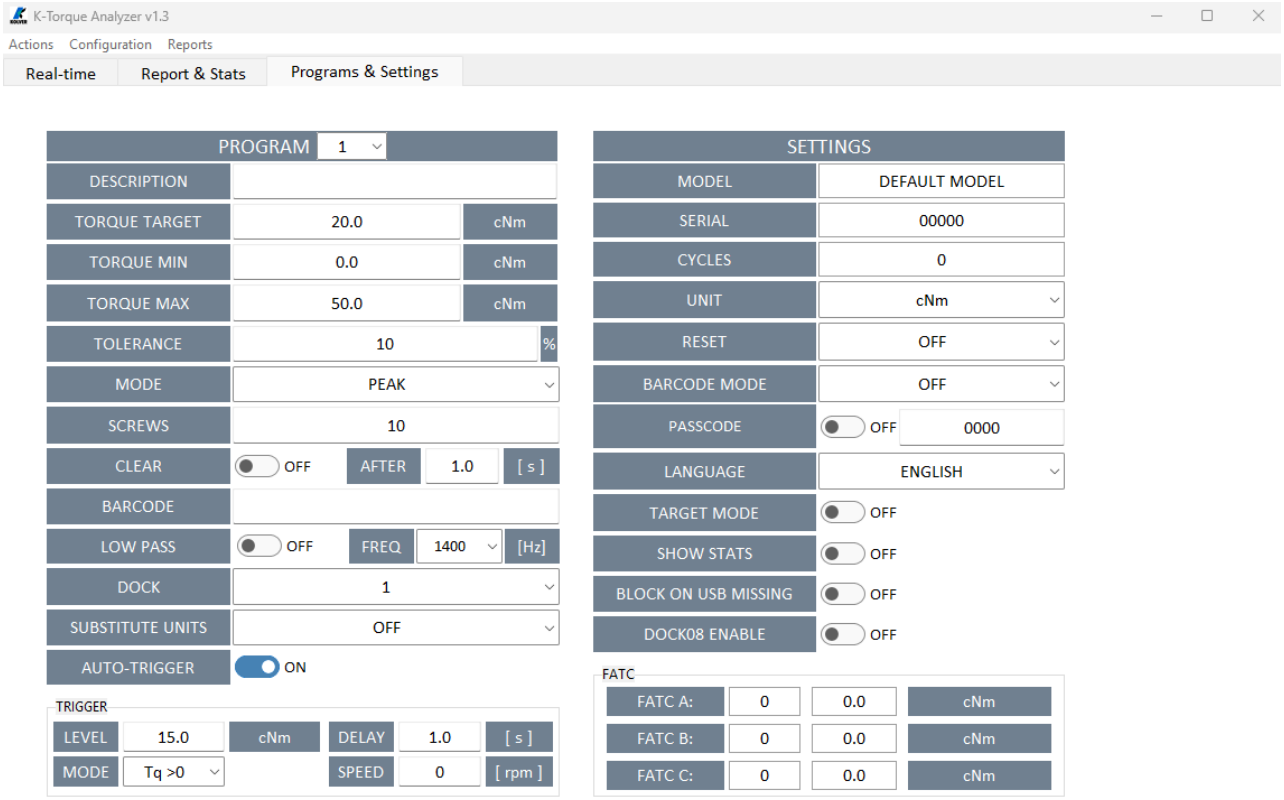

MAINTENANCE AND CARE

The K-TESTER is a low maintenance instrument. Handle with care, as you would any other high precision instrument. The K-TESTER contains a Lithium Ion battery: store accordingly.

If using a KTI transducer, open and re-lubricate the joint simulator threads every one hundred thousand cycles or whenever the rotation no longer feels smooth.

CALIBRATION

Contact Kolver to obtain calibration instructions.
The transducers can be re-calibrated in-house, by an external lab, or by Kolver. The calibration data is stored in the transducer board (within the KTI transducers, or within the 020079 board for rotary transducers).

GUARANTEE

This KOLVER product is guaranteed against defective workmanship or materials, for a maximum period of 12 months following the date of purchase from KOLVER, provided that its usage is limited to single shift operation throughout that period. If the usage rate exceeds of single shift operation, the guarantee period shall be reduced on a pro rata basis. If, during the guarantee period, the product appears to be defective in workmanship or materials, it should be returned to KOLVER or its distributors, transport prepaid, together with a short description of the alleged defect. KOLVER shall, at its sole discretion, arrange to repair or replace free of charge such items.
This guarantee does not cover repair or replacement required as a consequence of products which have been abused, misused or modified, or which have been repaired using not original KOLVER spare parts or by not authorized service personnel.
KOLVER accepts no claim for labour or other expenditure made upon defective products. Any direct, incidental or consequential damages whatsoever arising from any defect are expressly excluded.
This guarantee replaces all other guarantees, or conditions, expressed or implied, regarding the quality, the marketability or the fitness for any particular purpose.
No one, whether an agent, affiliate or employee of KOLVER, is authorized to add to or modify the terms of this limited guarantee in any way. However it's possible to extend the warranty with an extra cost. Further information at kolver@kolver.it.