K-DUCER

KDU-NT and KDS-NT*

Torque range: 5 – 70 cNm, 7 – 100 ozfin

OPERATOR MANUAL



*Patent pending

IDENTIFICATION DATA OF THE MANUFACTURER

KOLVER S.r.l.
VIA M. CORNER, 19/21
36016 THIENE (VI) ITALIA

IDENTIFICATION DATA OF THE PRODUCT

Code	Model	Torque (Nm)	Speed (rpm)	
			Min	Max
033001	KDU-NT			
165050	KDS-NT70	0.05 – 0.70	10	700
165050/HM	KDS-NT70/HM	0.05 – 0.70	10	700
165150	KDS-NT70CA	0.05 – 0.70	10	700
165150/HM	KDS-NT70CA/HM	0.05 – 0.70	10	700

TECHNICAL DATA OF THE PRODUCT

KDU-NT controller	**KDS-NT (patent pending) screwdriver**
FUSE: 2,00 A internal	FUSE: none
DIMENSIONS: 184 x 169 x h69 mm	DIMENSIONS: Ø 30 x 223 mm
WEIGHT: 1,22 Kg	WEIGHT: 320 g
POWER SUPPLY: 100÷240 V AC 50÷60 Hz	POWER SUPPLY: 40V DC
TENSION: 40V DC	TENSION: 40V DC
POWER: 12.5 W	POWER: 12.5 W
NOISE LEVEL: < 70 dB(A)	NOISE LEVEL: < 70 dB(A)
VIBRATION LEVEL: < 2.5 m/s²	VIBRATION LEVEL: < 2.5 m/s²

DECLARATION OF CONFORMITY

CE

KOLVER S.r.l. declares that the new tool here described: control unit model KDU-NT and screwdrivers KDS-NT series (see table) are in conformity with the following standards and other normative documents: 2006/42/CE, LVD 2014/35/UE, EMCD 2014/30/UE, EN 62841-2-2:2014, EN 62841-1: 2015, EN 60204-1, EN 61000-6-2, EN 61000-6-4, 2011/65/UE (RoHS III).

Name: Giovanni Colasante
Position: General Manager
Person authorized to compile the technical file in Kolver

Thiene, January 1st 2022

Giovanni Colasante

DECLARATION OF USE

Screwdriver (class I) suitable for industrial environment only. It shall be used for tightening. No other use will be permitted. For professional use only.

WARNING: To reduce the risk of injury, before using or servicing screwdriver, read and understand the following information as well as separately provided safety instructions (item code: 0MS000). The features and descriptions of our products are subject to change without prior notice.

DECLARATION OF NOISE AND VIBRATION EMISSION

NOISE LEVEL: < 70 dB(A)
VIBRATION LEVEL: < 2.5 m/s^2

These declared values were obtained by laboratory type testing in compliance with the stated standards and are not adequate for use in risk assessments. Values measured in individual work places may be higher than the declared values. The actual exposure values and risk of harm experienced by an individual user are unique and depend upon the way the user works, the work piece and the workstation design, as well as upon the exposure time and the physical condition of the user. We, KOLVER, cannot be held liable for the consequences of using the declared values, instead of values reflecting the actual exposure, in an individual risk assessment in a work place situation over which we have no control.

OPERATING MODE

The screwdriver can be manual or used as fixed spindle on an automatic machine.

CONTROL UNIT

Power source by KDU-NT series.

MAINTENANCE INSTRUCTIONS

Maintenance should be performed by qualified personnel only.

- Prior to any maintenance task: disconnect the screwdriver.
- When disassembling / reassembling the screwdriver, take the following precautions:
  - Check that the controller is switched off.
  - Disconnect the cable.

According to Directive 2012/19/EU concerning Waste Electrical and Electronic Equipment (WEEE), this product must be recycled.

Table of Contents

DECLARATION OF USE 3
INTRODUCTION 6
MODELS 6
INSTALLATION 7
Installation of KDU-NT unit 7
Connectors 8
Installation of KDS screwdriver 10
Lever installation 10
Cable connection and part numbers 11
Installation of reaction arm 11
Installation on a fixture 11
QUICK START 14
TERMINOLOGY 17
OPERATING THE KDS SCREWDRIVER 19
OPERATING THE K-DUCER CONTROL UNIT 21
Main Screen – Program Mode – navigation tree 21
Main Screen – Program Mode 22
Main Screen – Sequence Mode – navigation tree 24
Main Screen – Sequence Mode 25
Torque and Angle graphing 27
Visualizing the Torque and Angle charts 27
Interpreting the Torque and Angle charts 28
Torque and Angle charts with Running Torque 29
Determining the joint type 30
Determining the appropriate program settings 31
Hard/inelastic joints 31
Soft/elastic joints 31
Screwdriving Phases 32
Retrieving and storing the screwdriving results 33
Connecting a barcode scanner 35
Connecting a bit-tray or switchbox (CBS880, SWBX88) 35
CONFIGURING THE K-DUCER 37

ADVANCED TORQUE CONTROL STRATEGIES 37
RUNNING TORQUE 37
PREVAILING TORQUE 40
MULTI-STEP AND COMBINED PROGRAMS 41
MAIN MENU 42
PROGRAMS menu 43
PROGRAMS menu tree 44
TORQUE & ANGLE menu 48
RAMP, TIME, & PV TORQUE menu 50
REV & PRE-REV menu 53
OTHER menu 54
SEQUENCE SETTINGS menu 57
SEQUENCE SETTINGS menu tree 58
CURRENT SEQ. menu 59
GENERAL SETTINGS menu 61
USB menu 66
FREE K-EXPAND NT SOFTWARE 69
REMOTE CONTROL INTERFACES 70
24V I/O 71
Pinout (CN5) 72
MODBUS TCP 76
PROFINET / Ethernet IP / EtherCAT / others 79
MAINTENANCE AND CARE 80
CALIBRATION 80
EXPLODED VIEWS AND SPARE PARTS: 81
GUARANTEE 89

INTRODUCTION

K-DUCER NT is the new class A low torque intelligent transducerized assembly system from Kolver.
Thanks to a sophisticated control system, the electronic circuit communicates with KDS-NT (Patent pending) series screwdriver equipped with integrated torque/angle transducer and allows to stop the screwdriver instantly when reaching the preset torque or angle.

The AC 90÷260V - 50÷60Hz power supply is converted into 30VDC required by the screwdriver through a switching board.

IMPORTANT: K-DUCER NT is a highly accurate unit, but it is critically important to select the appropriate settings to ensure that the desired and proper torque is being applied and that the screwdriver motor works efficiently. Read the manual carefully and if unsure please contact Kolver for support.

MODELS

KDU-NT power supply and control unit:

Code	Model	Features
033001	KDU-NT	5" touch screen 64 programs and 8 sequences (jobs) multiple parameters, total job flexibility Torque and angle charts RJ45 ethernet connector providing Modbus TCP (server) 12-24V NPN I/O (6 inputs – 6 outputs) 2x RS-232 serial ports 1D and 2D barcode scanner compatibility

KDS-NT (Patent pending) series electric screwdrivers with torque and angle transducer (HM = half-moon bit holder):

Code	Model	Torque (Nm)	Speed (rpm)	
			Min	Max
165050	KDS-NT70	0.05 – 0.70	10	700
165050/HM	KDS-NT70/HM	0.05 – 0.70	10	700
165150	KDS-NT70CA	0.05 – 0.70	10	700
165150/HM	KDS-NT70CA/HM	0.05 – 0.70	10	700

INSTALLATION

Installation of KDU-NT unit

The KDU-NT features rubber feet and a tilted screen and can be conveniently set on a flat surface. All dimensions are reported in mm.

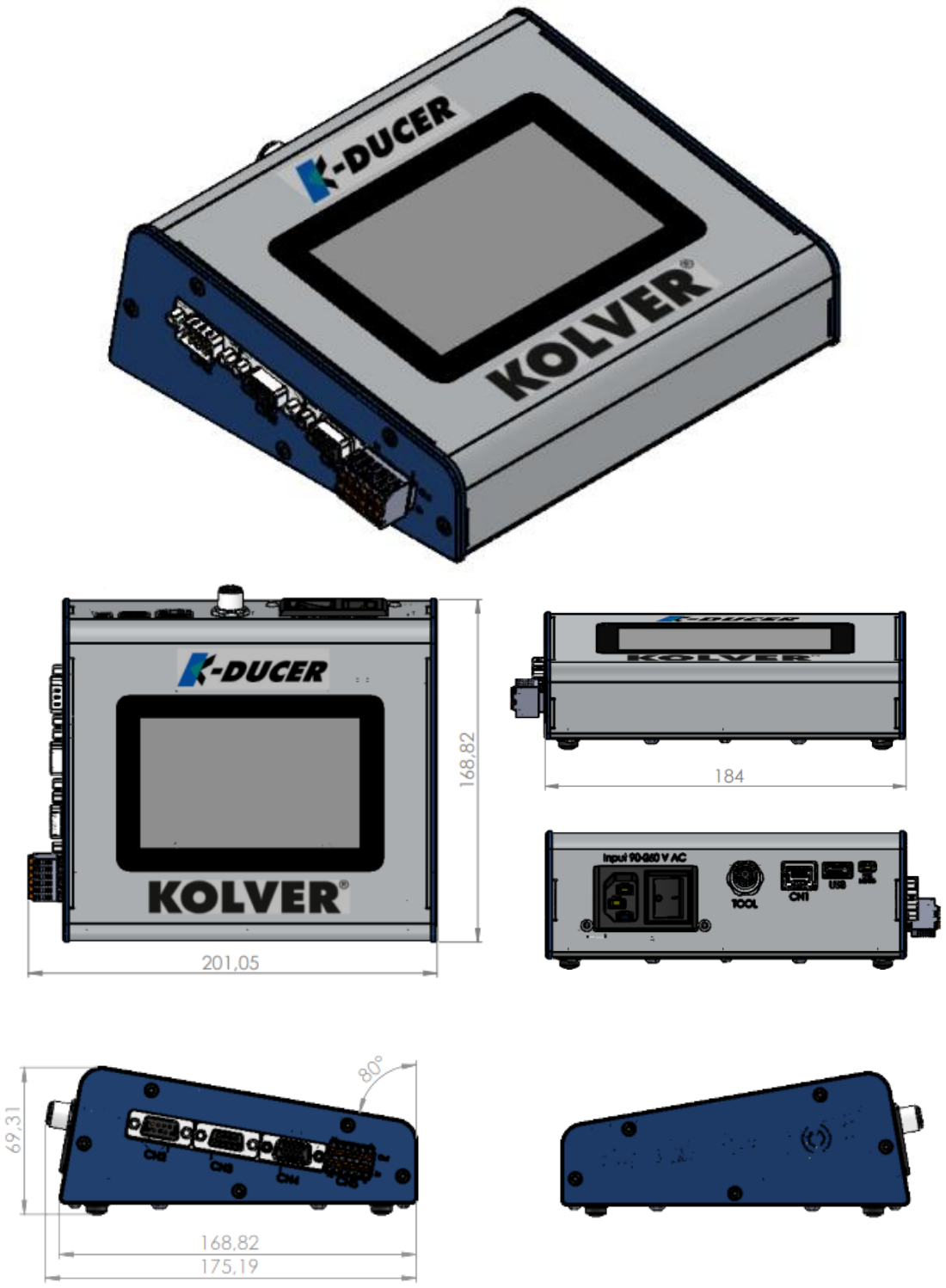

Also available separately:

- vertically and horizontally adjustable bracket (part number 010401)
- swivel table stand (part number 010402)

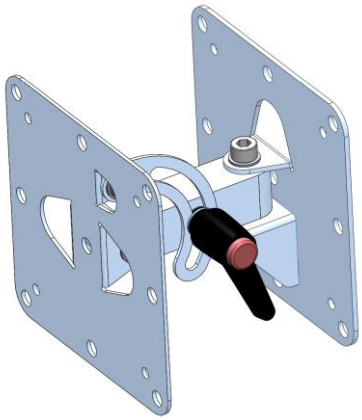

010401

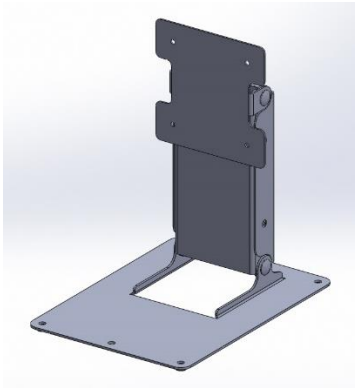

010402

Connectors

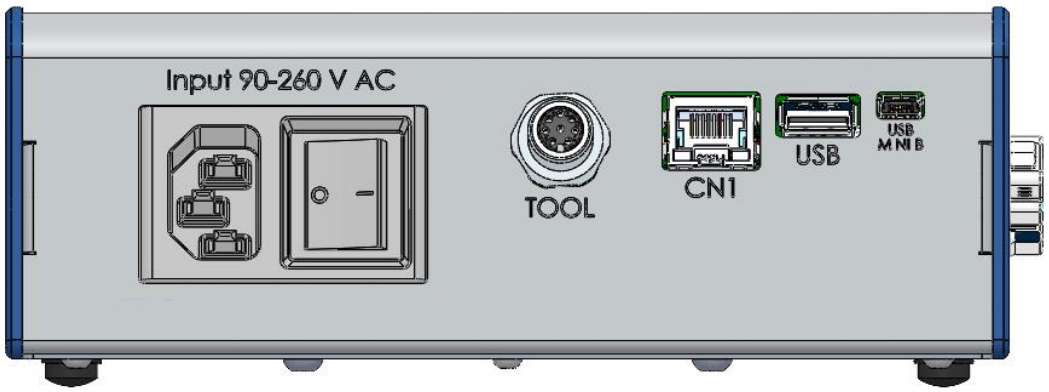

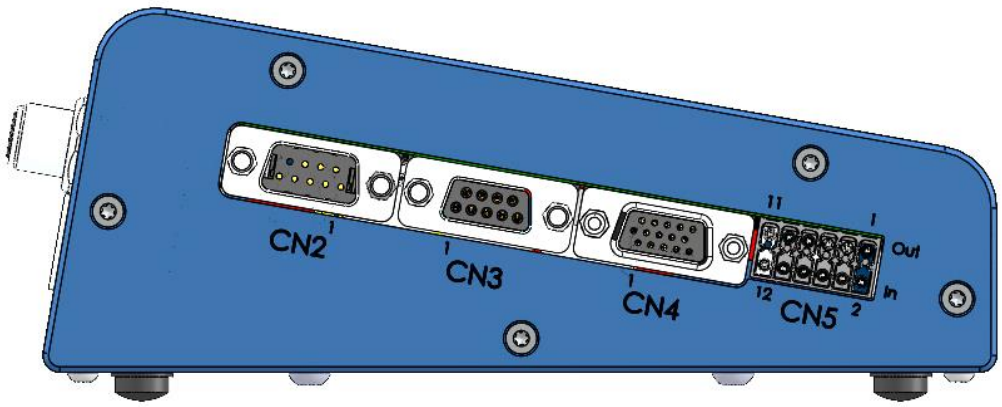

TOOL connector

To connect a KDS-NT (Patent pending) series screwdriver. Take care to respect the alignment tabs on the connector. See Installation of KDS screwdriver section for instructions on connecting the screwdriver.

CN1 ethernet connector RJ45

To connect using MODBUS TCP, or K-Expand from a PLC, PC, or server. Refer to the REMOTE CONTROL INTERFACES chapter.

USB A

Plug in a FAT32 formatted flash drive to automatically save screwdriving results and backup all settings. Refer to the Retrieving and storing the screwdriving results and USB menu sections.

USB mini B

To connect using K-Expand software. Refer to the K-EXPAND software chapter.

CN2 male serial connector

To connect with a compatible barcode scanner, such as Kolver Barcode P/N 020050, serial printers such as Kolver PRNTR1, or serial terminals (PC/PLCs).

CN3 female serial connector

To connect with Kolver accessories SWBX88/CBX880, serial printers such as Kolver PRNTR1, or serial terminals (PC/PLCs).

CN4 female serial connector

Reserved for servicing the unit.

CN5 I/O connector

To connect with 24V I/O functionality such as PLCs, pedals/buttons, LEDS, etc. Refer to the REMOTE CONTROL INTERFACES chapter.

Installation of KDS screwdriver

Lever installation

To install the lever kit (cod. 010450), simply remove the two M2.5 screws from the cover (cod. 250203), place the lever on top of the cover, and screw using the longer M2.5 screws provided with the lever kit.

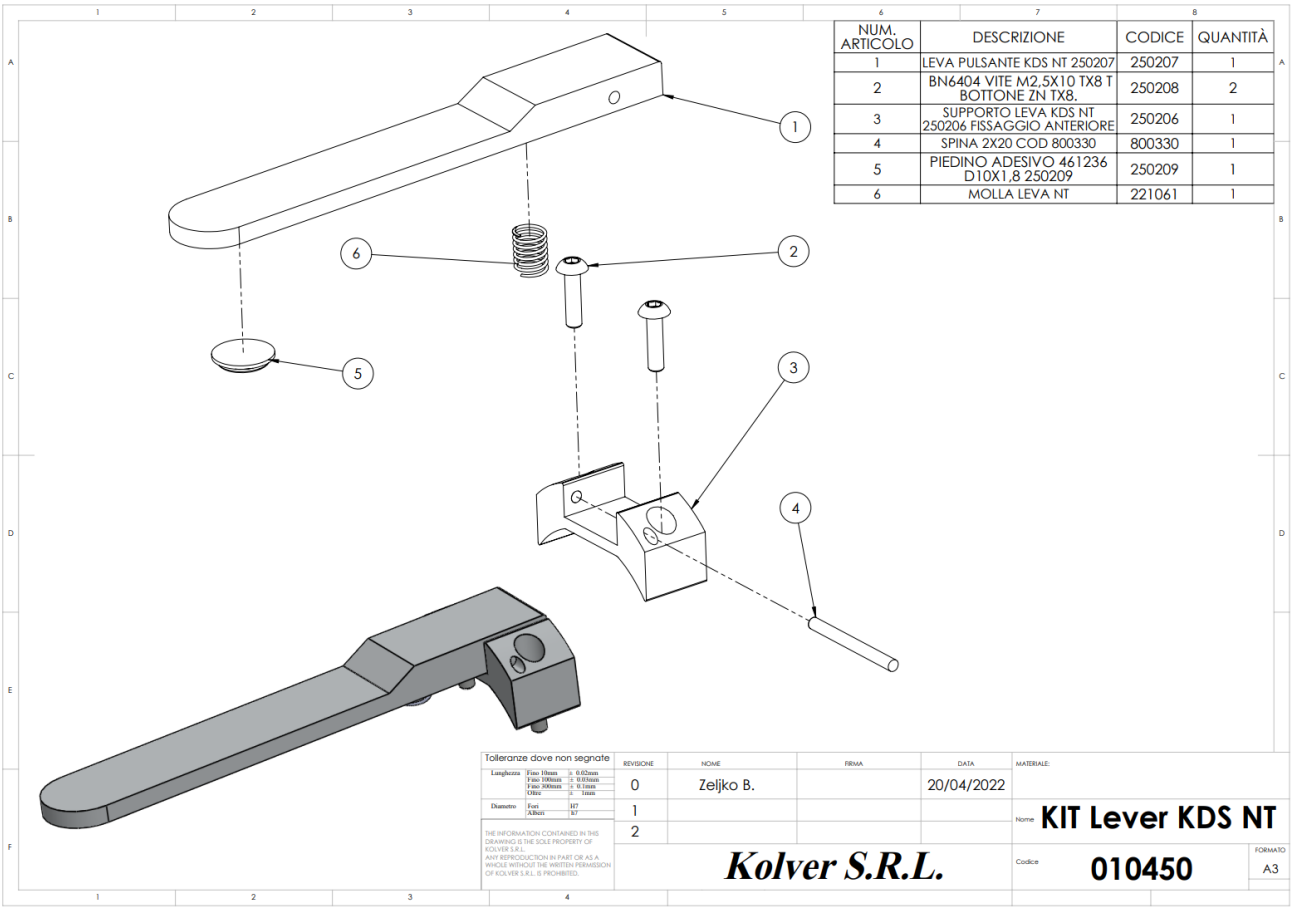

NUM. ARTICOLO	DESCRIZIONE	CODICE	QUANTITÀ
1	LEVA PULSANTE KDS NT 250207	250207	1
2	BN6404 VITE M2,5X10 TX8 T BOTTONE ZN TX8.	250208	2
3	SUPPORTO LEVA KDS NT 250206 FISSAGGIO ANTERIORE	250206	1
4	SPINA 2X20 COD 800330	800330	1
5	PIEDINO ADESIVO 461236 D10X1,8 250209	250209	1
6	MOLLA LEVA NT	221061	1

Tolleranze dove non segnate

REVISIONE	NOME	FIRMA	DATA	MATERIALE:
0	Zeljko B.		20/04/2022	
1				Nome KIT Lever KDS NT
2				

Kolver S.R.L. — Codice 010450 — FORMATO A3

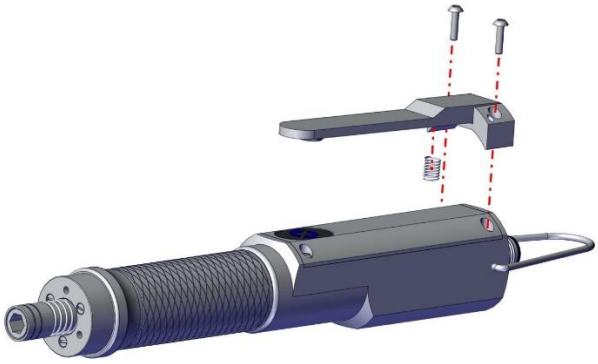

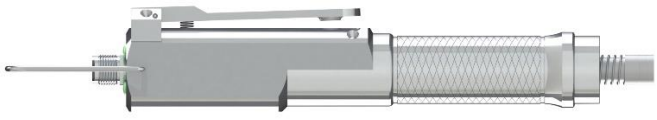

Cable connection and part numbers

The following cables are available for the K-Ducer NT system:

- part number 2500363 (8-pin M12 8ft cable)

To connect the screwdriver to the unit:

1. insert the male connector into the appropriate TOOL connector on the bottom of the unit, taking care to respect the alignment tabs. Push the connector in gently and turn the threaded nut clockwise.
2. insert the female connector into the appropriate connector at the top of the screwdriver, taking care to respect the alignment tabs. Gently push the connector into its position and turn the threaded nut clockwise.

Always hand-tighten the connection (avoid tools or wrenches) and do not overtighten.

To disconnect the cable:

1. lightly push the connector in towards the screwdriver (or the controller)
2. turn the threaded nut counterclockwise
3. pull the connector out

If necessary, you can connect and disconnect the screwdriver cable while the KDS-NT unit is powered on. The KDS-NT will recognize a disconnected or recently connected screwdriver and display a message.

Installation of reaction arm

Kolver recommends always using a reaction arm to increase the precision of low torque tightenings and for the comfort of the operator.
Fix the reaction arm to the indicated areas only, on the naked metal cylinder near the head of the screwdriver.

Warning: do not connect the reaction arm anywhere other than the above designated areas. Fixing the reaction arm to the middle of the screwdriver handle will squeeze the screwdriver shell, causing damage to the internal components, and failing to absorb the torque reaction safely and reliably.

Installation on a fixture

The KDS-NT can be mounted on a fixture via the three threaded M3 holes at the head of the screwdriver.
The CA models for automation also offer three threaded M3 holes on the side of the body of the screwdriver. Refer to the drawing below.

Reaction arm mounting:



Example of collaborative robot mounting (threaded tool-holders also available):

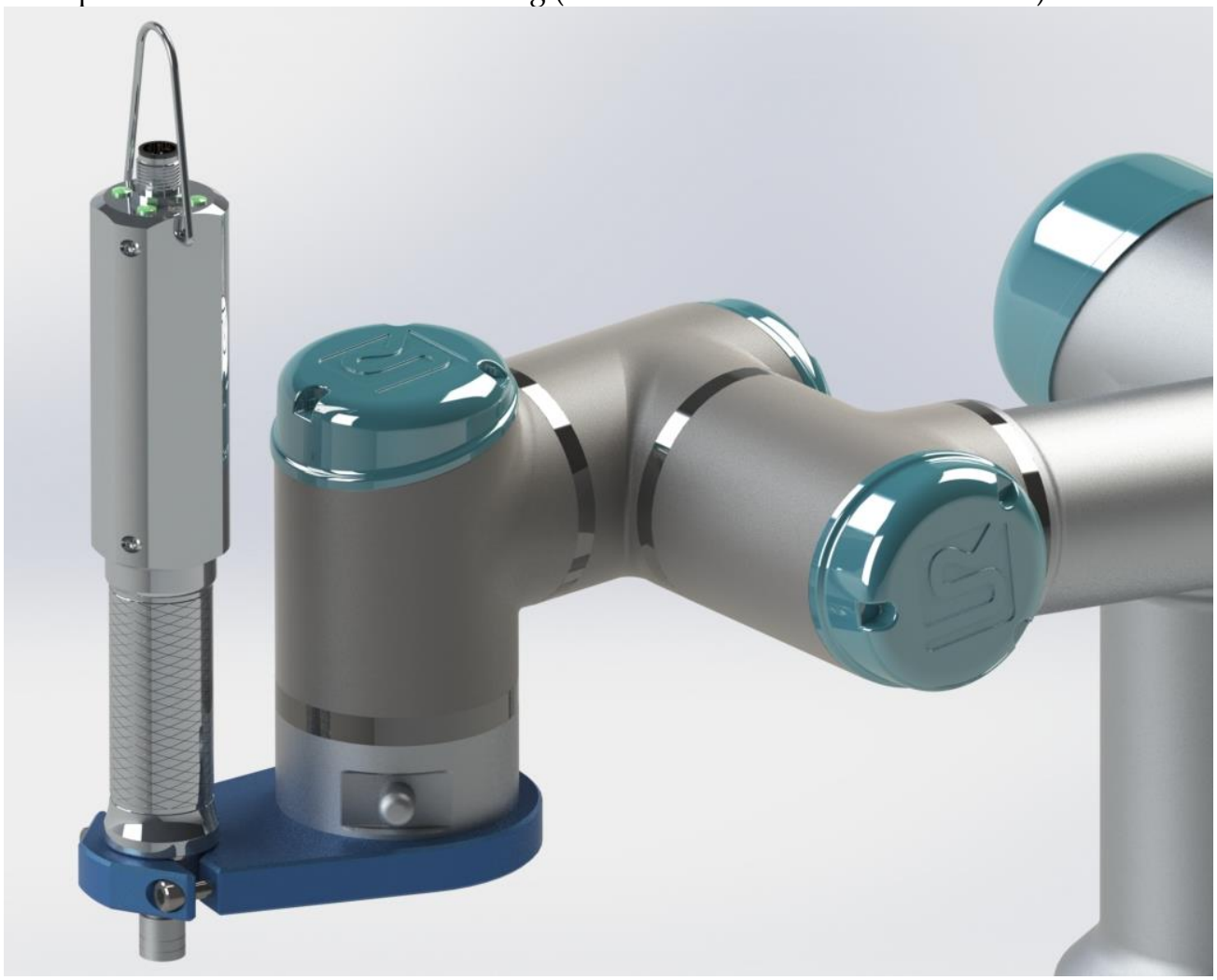

Threaded M3 fixturing holes (side holes on CA models only):

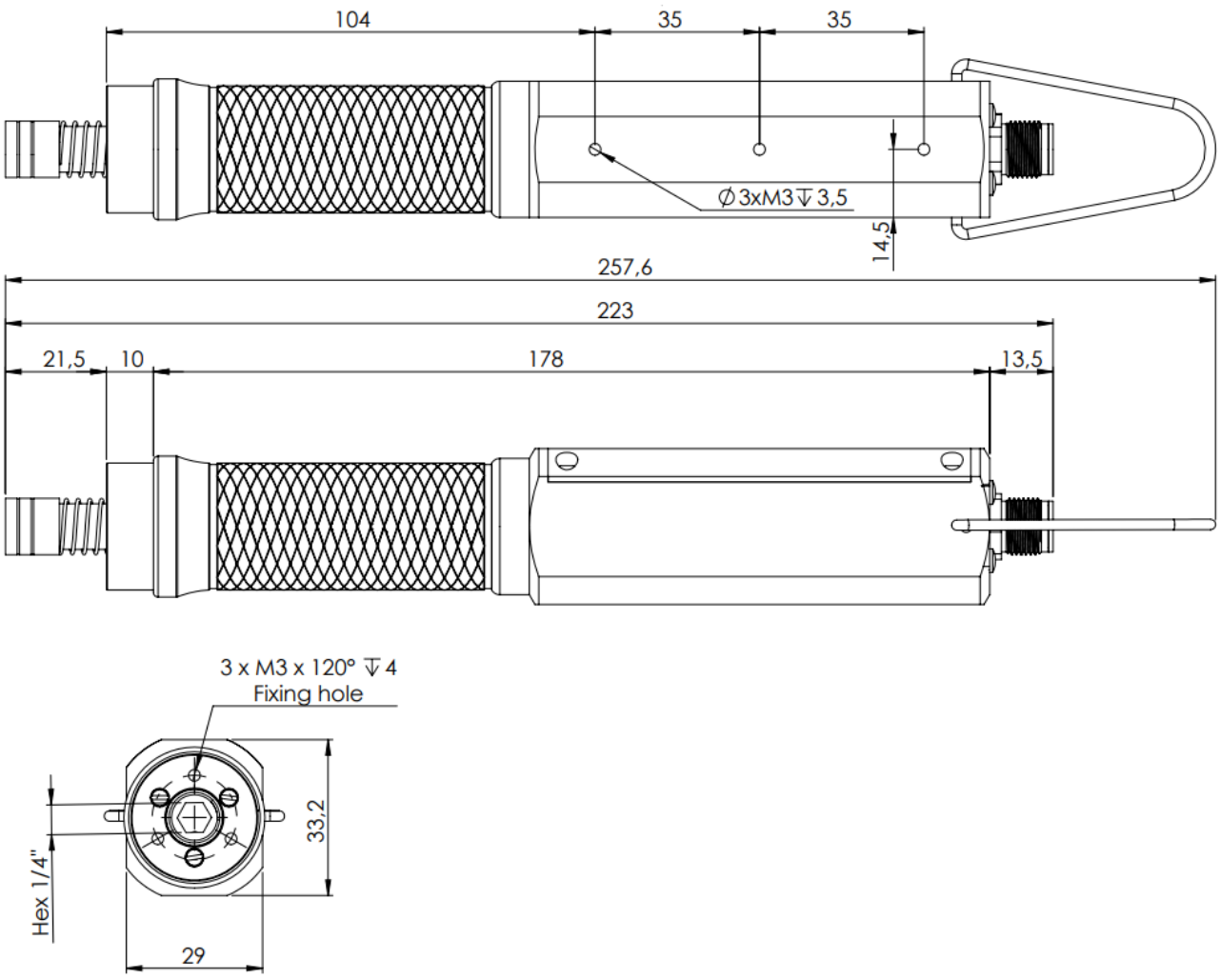

QUICK START

Turn the unit on through the on/off switch on the lower panel. The unit will carry a general system check and the words “NO SCREWDRIVER CONNECTED” will appear if no screwdriver is connected.
You can still enter the main menu without any screwdriver connected.
When a screwdriver is connected, it will be recognized by the unit and the "CONNECTED SCREWDRIVER" screen will appear for a few seconds, also showing the model and serial number.
All information pertaining to the connected screwdriver can also be retrieved in the General Settings menu.

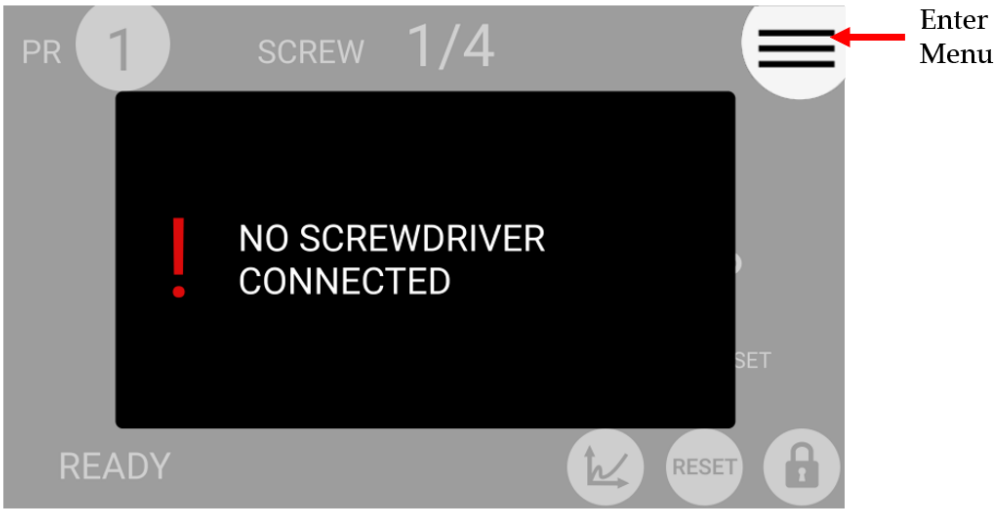

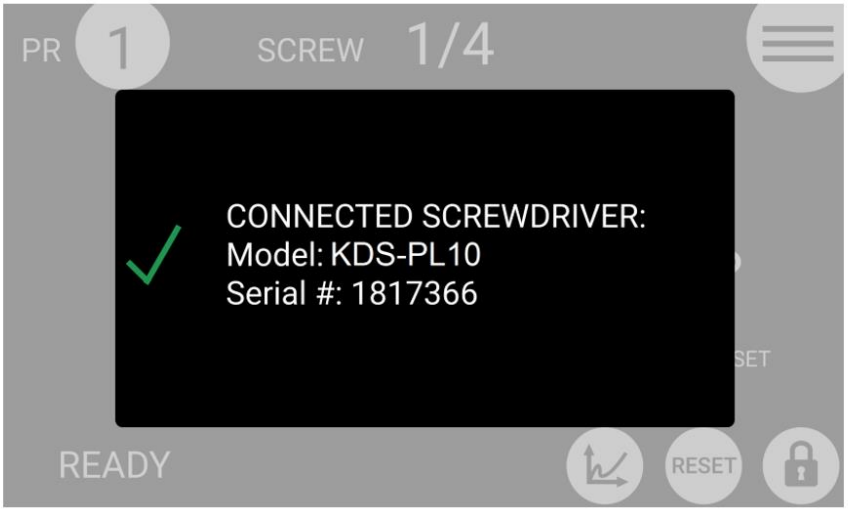

If the parameters set in the current program are outside the allowable range of the connected screwdriver, the following screen will appear:



To resolve the error, select a program previously configured for the connected screwdriver model, or enter the main menu to modify the parameter out of range for the current program.

The "Program parameter error" messages can be the following:

TorqueTargOverMax	Target torque higher than the allowed limit for the screwdriver.
SpeedTargOverMax	Target speed higher than the limit allowed for the screwdriver.
SpeedTargUnderMin	Target speed less than the limit allowed for the screwdriver.
DownshiftTorqueOverTarg	The fast phase torque setting is higher than the final target torque.
DownshiftSpeedOverMax	The speed of the fast phase of this program is higher than the maximum allowed by the screwdriver.
DownshiftSpeedUnderMin	The speed of the fast phase of this program is less than the minimum allowed by the screwdriver.
DownshiftSpeedUnder FinalSpeed	The speed of the fast phase is lower than the final speed (slow phase speed).
DownshiftInside RunningTorque	The Downshift Threshold falls inside the Running Torque Window.
TorqueMaxOverMaxLim	The Torque Target or Torque Max values are higher than the limit for the connected screwdriver.

TorqueMaxUnderMinLim	In angle control: the maximum torque set in the program is equal or lower than the minimum limit of the screwdriver. In torque control: The maximum torque set in the program is equal or lower than the target torque already set.
TorqueMinOverMaxLim	In angle control: the minimum torque set in the program is equal or higher than the maximum torque already set. In torque control: the minimum torque set in the program is equal or higher than the target torque already set.
RevTorqueOverMax	The reverse torque of this program is higher than the maximum torque of the screwdriver.
RevSpeedOverMax	The reverse speed is higher than the maximum allowed by the screwdriver.
RevSpeedUnderMin	The reverse speed is lower than the minimum allowed by the screwdriver.
RunningTorqueOverMax	In running torque – compensate mode, the sum of the max running torque and the target torque is higher than the maximum torque of the screwdriver. In running torque – monitor mode, the max running torque is higher than the maximum torque of the screwdriver.

If the connection with the screwdriver is successful, the main screen will be displayed, and the screwdriver will be ready for work.

Connect a thumb drive on the USB-A port (the larger USB port) to automatically save each screwdriving result.

TERMINOLOGY

KDU/K-DUCER/control unit: the KDU-NT control unit

KDS/screwdriver: the transducerized screwdriving tool to be used with the KDU control unit

Transducer: electronic component installed inside the KDS screwdriver which measures the torque in real time

Tightening: the screwdriving cycle, from start (pressing of the lever or initiating remote lever control), to finish (automatic motor stop or lever or remote lever control release, whichever happens first)

Rundown: the portion of the tightening cycle before reaching the seating point (the point where the screw or bolt head touches the assembly)

Seating point: the point of the tightening at which the head of the fastener touches the assembly, marked by an increase in the torque rate (steeper torque-angle slope) and marking the end of the rundown phase.

Torque: rotational force

Closing torque: the last torque value measured when the screwdriver motor stopped or when the screwdriver lever or remote lever control was released.

Running torque: the peak or average torque value encountered during the rundown phase, before reaching the seating point.

Clamping torque: the closing torque minus the running torque. This is, theoretically, the only portion of the closing torque that generates a clamping force from the fastener.

Target torque: the closing torque that the system will target (torque control mode only), resulting in a "Screw OK" result if successful. In Running Torque – Compensate mode, the system targets a **Clamping torque** equal to the target torque, instead of a closing torque.

Prevailing torque: an optional phase of the tightening during which the applied torque is allowed to reach the maximum torque achievable by the screwdriver.

Torque control mode: a tightening where the screwdriver motor automatically stops upon reaching the target torque

Angle: the revolutions of the tip of the screwdriver, in degrees. The starting point of the angle measurement depends on the settings chosen.

Target angle: the angle measurement upon which the screwdriver motor will stop (angle control mode only), resulting in an "Angle OK" result if successful

Angle control mode: a tightening where the screwdriver motor automatically stops upon reaching the target angle

Run time: the duration of the tightening, in seconds

Run time mode: a tightening where the screwdriver motor automatically stops at the desired run time

Program/batch: a set of one or more screws sharing the same parameters (torque, angle, speed, barcode, etc)

Program number: the identifier of one of the 64 configurable programs (1 to 64)

Current program: the program currently selected for tightening

Program mode: in this mode, the unit works according the selected program

Sequence/Job: an ordered set of up to 16 programs, with the option to define how to transition between programs

Sequence letter/number: the identifier of one of the 8 configurable sequences (A to H)

Current sequence: the sequence currently selected for tightening

Sequence mode: in this mode, the unit works according to the selected sequence

OK/NOK: the result of the tightening. OK: tightening finished respecting all of the configured parameters. NOK: tightening finished without respecting one or more of the configured parameters.

Running torque mode: an optional phase of the tightening during which the peak or average torque value is measured, and then added to the torque target in real time for the current tightening.

OPERATING THE KDS SCREWDRIVER

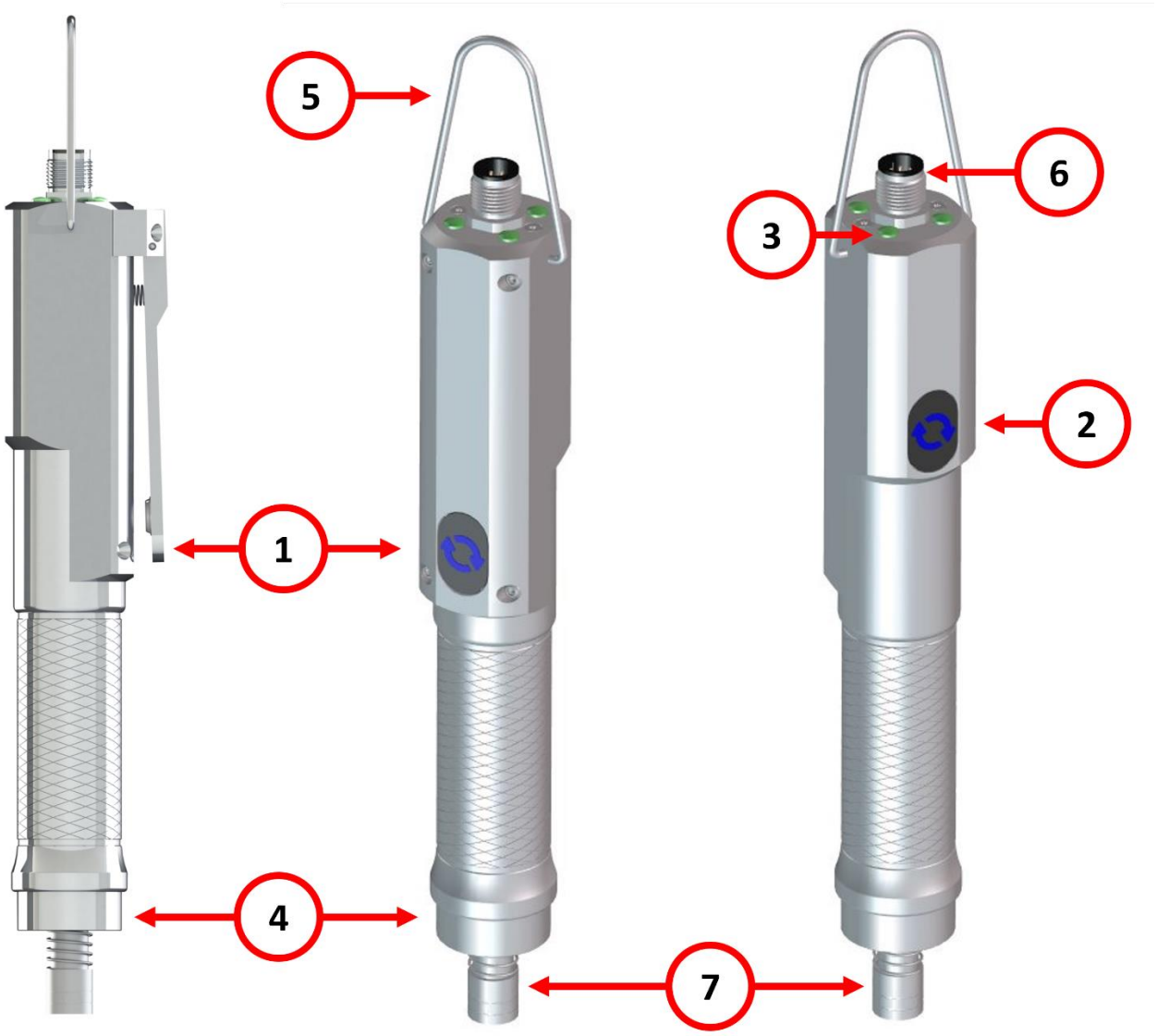

Warning: Kolver strongly recommends using a reaction arm when applying torques lower than 0.30 Nm, to improve the precision of the torque applied by eliminating any effect and impulse from the operator's wrist.

(1) Lever

Press and hold the lever to initiate a tightening.
The screwdriver will automatically stop according to the configured program, in either an OK or a NOK state, depending on the success of the tightening.
The screwdriver will also stop if the lever is released in the middle of the tightening, and either return to the READY state or raise the NOK state if the LEVER ERROR option is active for the current program (Programs menu > Other > LEVER ERROR).
Note: KDS series screwdrivers sizes 20Nm and above provide a "START" button instead of a lever. The functionality remains the same.

(2) Reverse button

Press and hold the button to initiate a defix run, rotating in the opposite direction of the selected direction of rotation for the lever (see Programs menu > Other > ROTATION).
The behavior of the reverse button can be changed from the general settings menu (General Settings > REVERSE BUTTON).

(3) LEDs

The two LEDs indicate the state of the screwdriver:

	Blinking white: the screwdriver was just connected to the K-DUCER control unit
	Off: the screwdriver is ready, or the screwdriver is not connected
	Solid green: the last screw result was OK
	Solid red: the last screw result was NOK
	Solid blue: screwdriver is running in the tightening direction, either via the lever or via remote control
	Solid purple: the screwdriver is running in the de-fix direction, either via the reverse button, or via remote control
	Blinking purple: the reverse button is in switch mode and is activated. The screwdriver is ready to run in de-fix rotation via the main lever.

(4) Reaction arm connections

Fix the reaction arm to one these areas only, and never anywhere else on the screwdriver.

(5) Hanging hook

To hang the screwdriver somewhere easily accessible in the operator's workbench.

(6) Female connector

To connect the screwdriver to the KDU-NT control unit.

(7) Bit Holder

¼" Hex spring-loaded power-tool bit holder (non /HM models only)
Half-moon spring-loaded power-tool bit holder (/HM models only)
Push the outer cylinder in towards the screwdriver to release the lock to insert or remove the desired bit.

OPERATING THE K-DUCER CONTROL UNIT

Main Screen – Program Mode – navigation tree

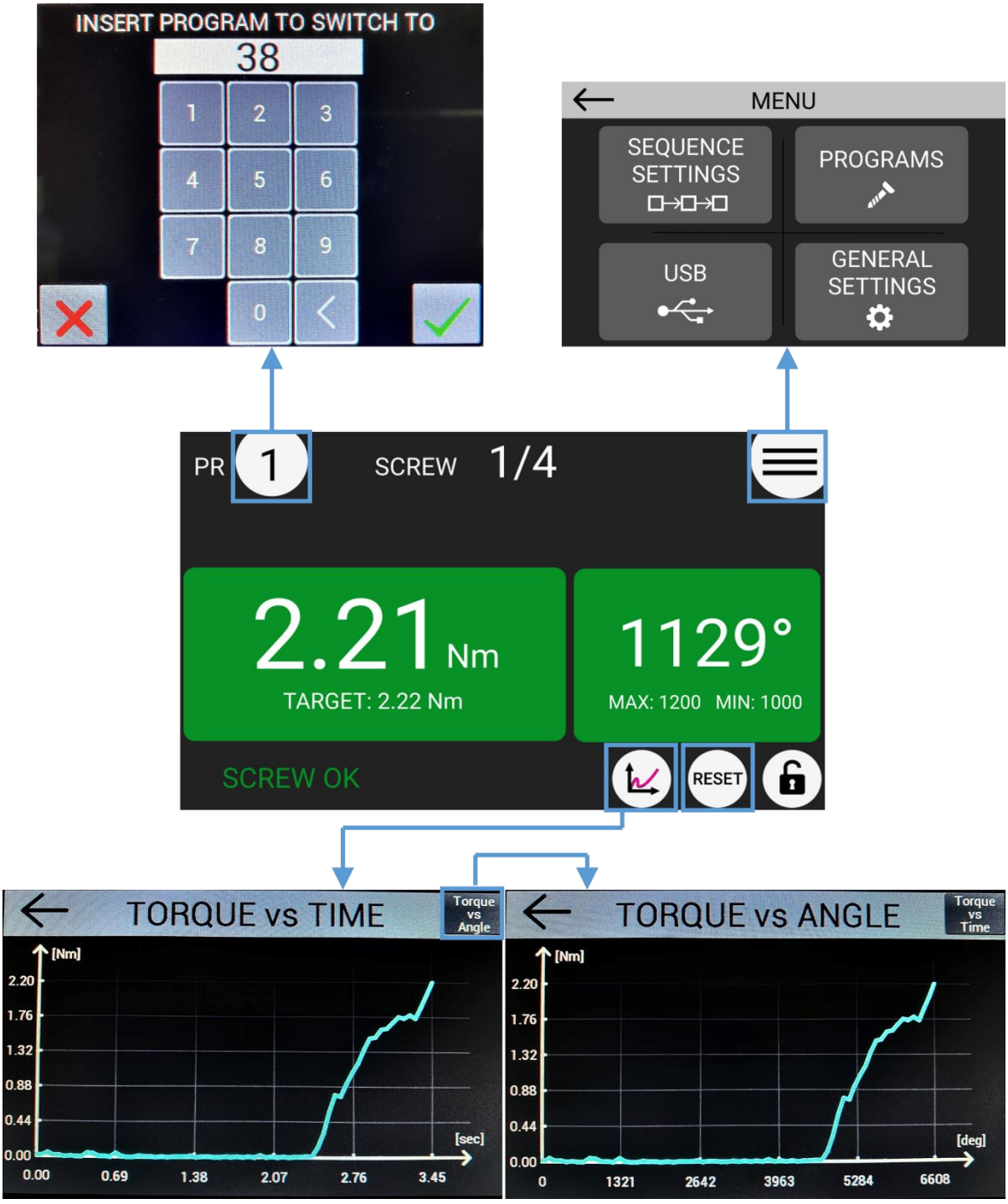

(see Torque and Angle graphing for more information)

Main Screen – Program Mode

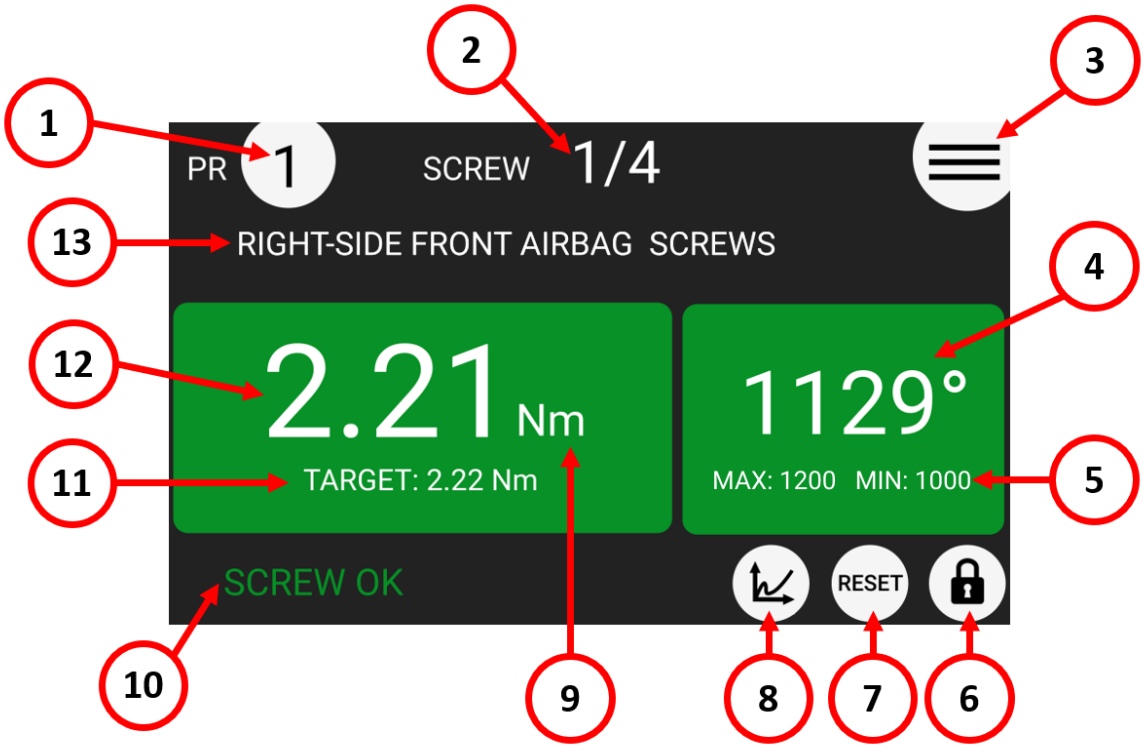

(1) Program ("PR") number currently selected

Touch to select a different program (1 through 64).

(2) Screw count

Counter: screws successfully completed / number of screws in current program

Note: does not appear if NUMBER OF SCREWS parameter is set to zero. Number of screws is also referred to as "batch size" in the industry.

(3) Main Menu Button (≡)

Tap to enter the main menu

(4) Angle value

Measured angle value for last screw, in degrees.

(5) Angle target / bounds

Shows the target angle when in angle control mode, or the min/max angle bounds when in torque control mode or timed tightening mode, for the current program, in degrees.

(6) Menu lock status

White background means no password is required to access the configuration menu.

Red background means the configuration menu is password protected.

(7) Reset ("RST") button

Screw/Program/Sequence Reset ("RST") button. Presence and function of this button depend on the corresponding settings in the GENERAL SETTINGS menu.

(8) Torque charts

Tap to display the Torque-time and torque-angle charts for last screw. Refer to Torque and Angle graphing for usage.

(9) Torque measurement unit

You can select a different unit from the GENERAL SETTINGS menu.

(10) Status bar

Shows the last screw result or error messages (ready, screw OK, screw NOK, errors).

(11) Torque target / bounds

Shows the target torque when in torque control mode, or the min/max torque bounds when in angle control mode or timed tightening mode, for the current program.

(12) Torque value

Measured torque value applied to the last screw.

(13) Program description

Shows the description for the current program. You can enter a description for the current program via Programs Menu > Other > DESCRIPTION.

Main Screen – Sequence Mode – navigation tree



(see Torque and Angle graphing for more information)

Main Screen – Sequence Mode

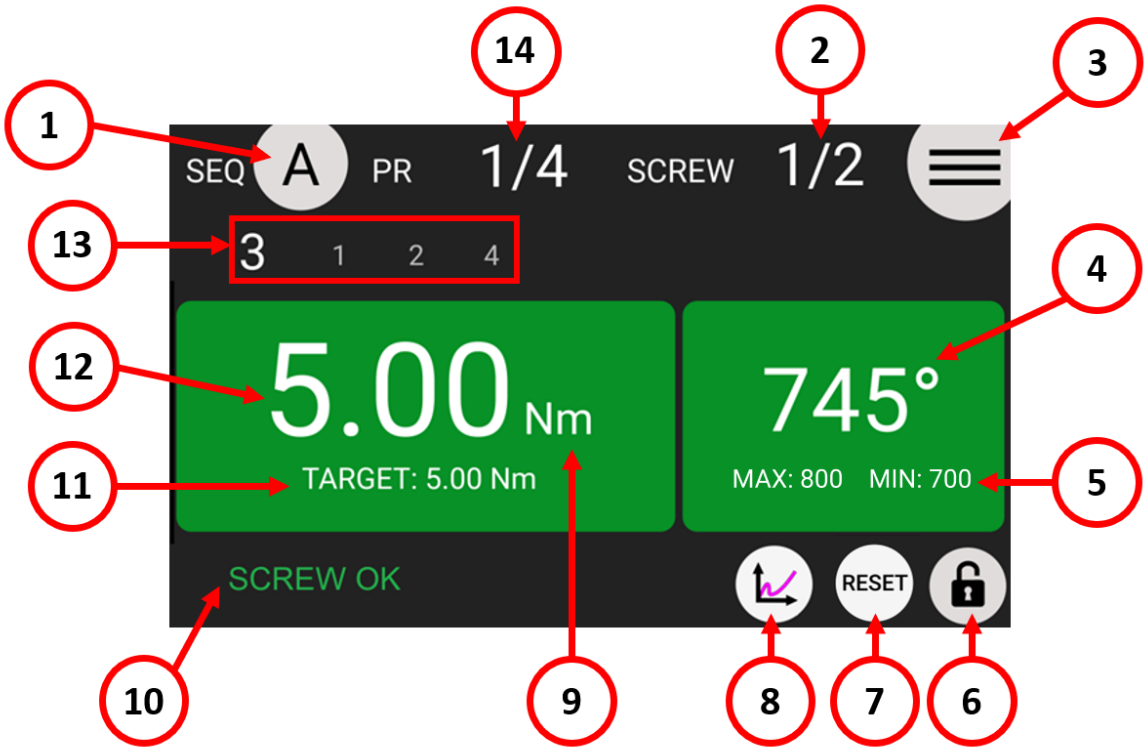

(1) Sequence ("SEQ") currently selected

Touch to select a different sequence (A through H).

(2) Screw count

Counter: screws successfully completed / number of screws in current program

Note: does not appear if NUMBER OF SCREWS parameter is set to zero. Number of screws is also referred to as "batch size" in the industry.

(3) Main Menu Button (≡)

Tap to enter the main menu

(4) Angle value

Measured angle value for last screw, in degrees.

(5) Angle target / bounds

Shows the target angle when in angle control mode, or the min/max angle bounds when in torque control mode or timed tightening mode, for the current program, in degrees.

(6) Menu lock status

White background means no password is required to access the configuration menu.

Red background means the configuration menu is password protected.

(7) Reset ("RST") button

Screw/Program/Sequence Reset ("RST") button. Presence and function of this button depend on the corresponding settings in the GENERAL SETTINGS menu.

(8) Torque charts

Tap to display the Torque-time and torque-angle charts for last screw. Refer to Torque and Angle graphing for usage.

(9) Torque measurement unit

You can select a different unit from the GENERAL SETTINGS menu.

(10) Status bar

Shows the last screw result or error messages (ready, screw OK, screw NOK, errors).

(11) Torque target / bounds

Shows the target torque when in torque control mode, or the min/max torque bounds when in angle control mode or timed tightening mode, for the current program.

(12) Torque value

Measured torque value applied to the last screw.

(13) Current and next program numbers in sequence

Shows the current program loaded in the sequence in larger font, and the following program numbers in the sequence.

(14) Program count

Counter: programs successfully completed / number of programs in current sequence

Torque and Angle graphing

The K-DUCER offers a powerful torque and angle graphing functionality, which can be used to study the characteristics of your fastening joint and optimize the PROGRAMS menu settings to maximize precision while minimizing assembly cycle time.
The Torque and Angle graphing data for each tightening can also be saved with the screwdriving results, refer to the Retrieving and storing the screwdriving results section for more information.

Visualizing the Torque and Angle charts

To open the Torque and Angle graph screen, simply tap the graph icon on the bottom right of the screen, after a tightening.
To switch between the "Torque vs Time" and the "Torque vs Angle" graph, tap on the button on the top right of the graph screen.
You can only visualize the graph corresponding to the last tightening, however, the torque and angle graphing for each tightening can be automatically stored to a USB drive or to a networked PC as described in the Retrieving and storing the screwdriving results section.



Interpreting the Torque and Angle charts

The "Torque vs Time" graph shows the torque measured by the screwdriver starting from the moment the lever is pressed (or a remote-lever command is received) up to the moment the tightening finishes correctly in an error condition (such as "Torque Over Max").

The Y-Axis represents the torque data, in the MEASUREMENT UNITS selected.
The X-Axis represents the time, in seconds, or, in the case of the Torque vs Angle chart, the **angle of revolution**, in degrees, always starting from the moment that that the lever is pressed and ending at the moment the tightening finished.

The maximum Y-Axis tick shown on the Y-Axis always corresponds to the **maximum torque** measured during the tightening. In those situations where the **maximum torque** is not equal to the **final torque**, the **final torque** value will be annotated next to the final point of the torque graph.

When the Angle Count STARTING AT setting is set to "Ext" or to a non-zero Torque Threshold, the torque graph will change color and the **torque** value at which the angle count was triggered will be displayed on the screen.



The graphs illustrated here were produced with a KDS-PL6/ESD screwdriver running on Kolver joint simulator (part number 240600) arranged in the semi-elastic configuration. We supplied additional hand-resistance to generate the "starting at" threshold.

Torque and Angle charts with Running Torque

When utilizing the RUNNING TORQUE feature, the graph will highlight the Running Torque WINDOW in purple.
The average or peak running torque value will also be displayed on the screen, depending on the selected setting.
The total torque value will be highlighted on the graph, next to the final point of the torque trace, and the "clamping torque" will be displayed in green (for OK results) or in red (for NOK results) as well.
The "clamping torque" in this case refers to the total torque minus the running torque value.
When the Angle Count STARTING AT setting is set to "Ext" or to a non-zero Torque Threshold, the torque graph will change color and the **torque** value at which the angle count was triggered will be displayed on the screen.

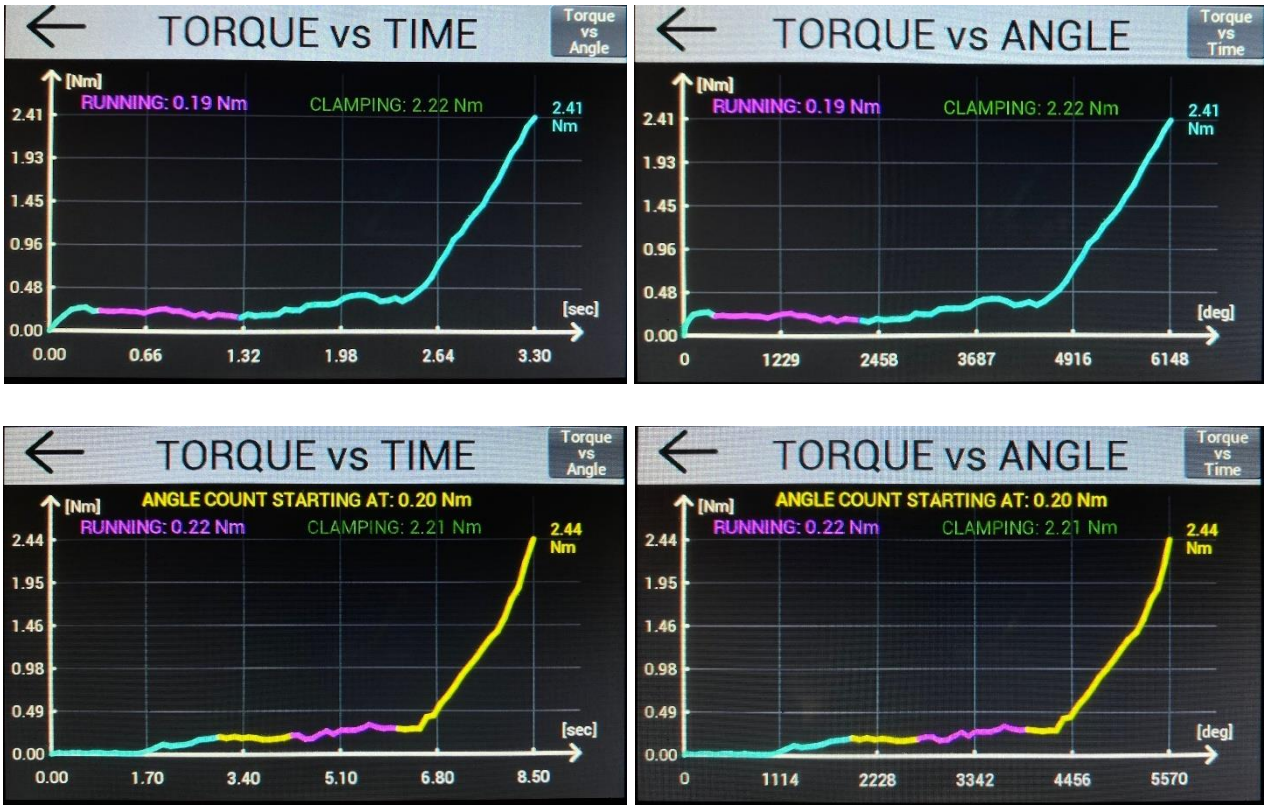

The graphs illustrated here were produced with a KDS-PL6/ESD screwdriver running on Kolver joint simulator (part number 240600) arranged in the semi-elastic configuration.
We supplied additional hand-resistance to generate a non-zero "running torque" value and "starting at" threshold for illustration purposes.

Determining the joint type

Understanding the characteristics of your joint type is critical to maximize the precision of the K-DUCER system, minimize the wear-and-tear on the tool, and minimize the assembly cycle time for your application.

According to the ISO standard 205393:2017, the types of joints found in practice will fall in between these two "extreme" definitions:

1. Soft, elastic, low torque-rate joint: after the fastener is seated, the tightening reaches its target torque in more than one full revolution (> 360°).
   Examples: plastic screws; fasteners with split washers; self-threading fasteners.
2. Hard joint, inelastic joint, or high torque-rate joint: after the fastener is seated, the tightening reaches its target torque in a fraction of a revolution (< 30°).
   Examples: metal screws on metal socket with simple washer.

Seating indicates the point at which the underside of the screw or bolt **head** touches the socket, after the rundown phase.

A simple approach to determine the joint type is to perform a tightening of your fastener with the K-DUCER and observe the slope of the Torque vs Time graph.

A soft joint will show a moderate slope from the seating point to the final torque, while a hard joint will show a very high slope (almost vertical).

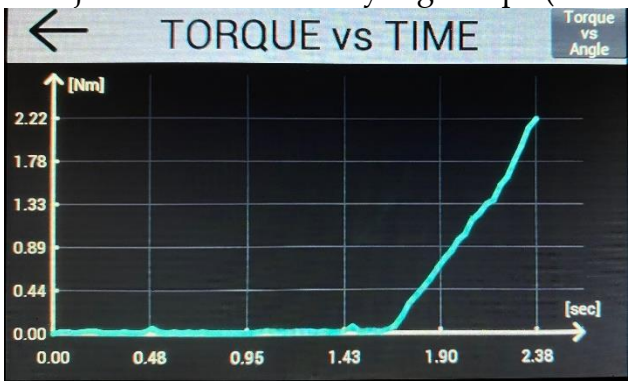

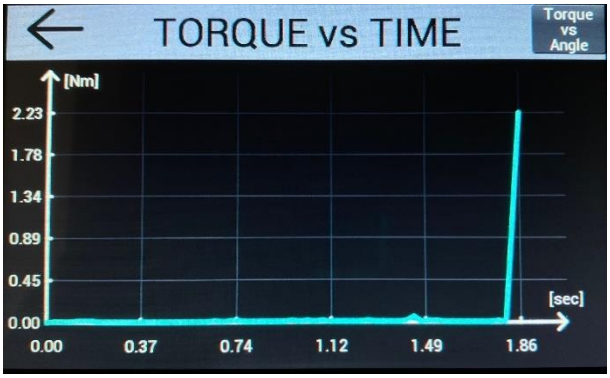

Left picture: Torque vs Time graph for a soft joint, generated using a KDS-PL6/ESD on Kolver joint simulator 240600.

Right picture: Torque vs Time graph for a hard joint, generated using a KDS-PL6/ESD on a metal screw with non-locking washer on a threaded metal socket.

Also refer to the SELECTING THE APPROPRIATE SETTINGS section.

Determining the appropriate program settings

The K-DUCER is a highly accurate system, but it is critically important to select the appropriate settings to ensure that the desired torque is correctly applied, and that the screwdriver motor works effectively and efficiently.

Determining the appropriate program settings for your application requires careful consideration and is ideally done by a trained engineer with knowledge of the torque specifications and of the mechanical characteristics of the assembly joint.
Please take advantage of the free support provided by your Kolver representative throughout this process.

What follows are some general guidelines, but they are not meant to substitute a careful examination of the application. Each application is unique and may require significant deviations from these guidelines.
These guidelines are always superseded by the specifications of the assembly joint and by all safety requirements of the operator and work environment.
Kolver is not responsible for damages or injuries resulting from following these guidelines.

Hard/inelastic joints

These joints are best finished at low speed, to improve precision and avoid a high velocity impact at the end of the tightening.
Choose a low FINAL SPEED such as 100 RPM*, and if desired, use a two-speed approach by activating the DOWNSHIFT setting using either an angle threshold or a torque threshold equal to 20-50% of the target torque.
The lower the torque target is relative to the range of the screwdriver, the higher the effect of motor inertia will be, requiring a lower final speed to avoid overshooting.

Soft/elastic joints

These joints are best executed at high speed, to avoid exposing the motor to a prolonged time-under-tension and overheating the tool.
Choose a higher FINAL SPEED for these joints, and if a two speed approach is required, activate the DOWNSHIFT setting using either an angle threshold or a torque threshold of at least 80% of the target torque to ensure most of the torque is applied at higher speed.
Very elastic joints, or semi-elastic joints with a high target torque relative to the range of the screwdriver, may benefit from a higher FINAL SPEED and from avoiding the use of the DOWNSHIFT function altogether.

*for KDS-PL15 and smaller high-speed drivers. Use a lower speed for higher torque tools.

Screwdriving Phases

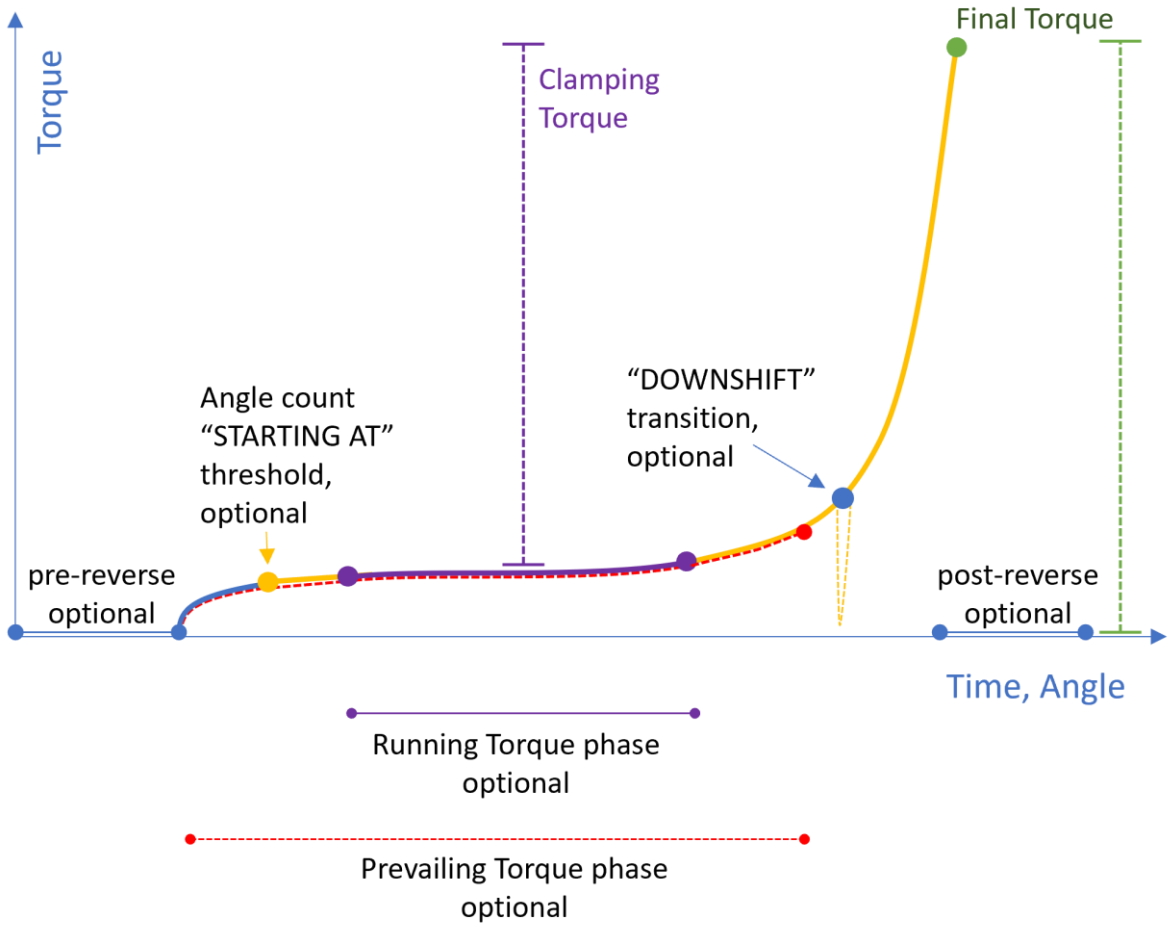

All colored circles in the diagram above represent configurable targets or thresholds.

Phase	Speed	Halting Torque	Halting Angle
Pre-reverse	Reverse speed	Reverse Torque	Pre-reverse setting
Prevailing Torque	Tightening speed*	Highest torque achievable by KDS screwdriver	Max angle (TC) Target angle (AC)
Running Torque	Tightening speed*	Target torque (TC) Max torque (AC)	Max angle (TC) Target angle (AC)
Tightening	Tightening speed*	Target torque** (TC) Max torque (AC)	Max angle (TC) Target angle (AC)
Post-reverse	Reverse speed	Reverse Torque	Post-reverse setting

TC = Torque Control Mode (i.e., Torque Targeting Mode)
AC = Angle Control Mode (i.e., Angle Targeting Mode)

* the tightening speed is equal to the FINAL SPEED after the Downshift threshold or if the DOWNSHIFT function is OFF, otherwise it is equal the DOWNSHIFT RPM setting
** plus the running torque value, if Running Torque Compensate mode is enabled

Retrieving and storing the screwdriving results

There are several ways to store and retrieve the results of each tightening:

Via MODBUS TCP (CN1)

Refer to the MODBUS TCP section. Kolver also provides ready-to-use Python, C#, and PowerShell scripts to retrieve and save the screwdriving results that can be run on a PC computer or server, included in the MODBUS TCP code examples and literature packet.

Via K-Expand software (mini-USB or CN1)

Refer to the K-EXPAND software section.

On USB flash drive (USB-A)

Simply connect a FAT32-formatted USB drive on the USB-A connector.
The K-DUCER will create a folder named as the serial number of the connected screwdriver.

Inside this folder, the K-DUCER will save the results of each tightening inside a TXT file. The name of the file will be the date (YYMMDD) of the first tightening contained, and a new file will be created for each day date.

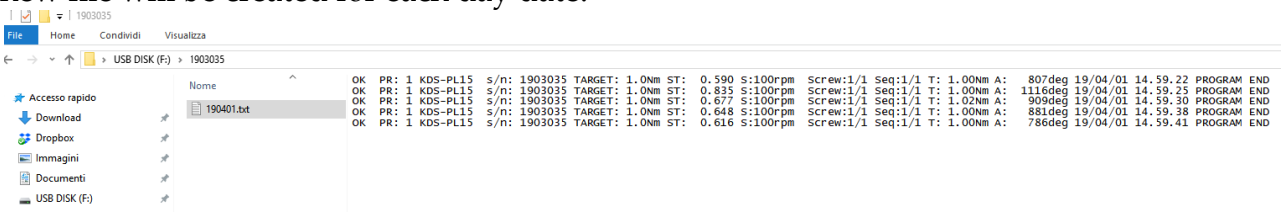

Via serial printer or serial terminal (CN2 or CN4)

You can connect to CN2/CN4 with a serial printer (for example Kolver model PRNTR1) or with any serial terminals, for example Hyper Terminal, Realterm, or K-Expand for PC, to print the results of each tightening.
The print string is automatically transmitted at the end of each tightening.

The serial connection parameters must be:
RS232 – 9600 baud – 8 data bits – 1 stop bit – no parity

The print string contains the following data:

Section	Description	Example
Barcode	Printout of the scanned barcode. In dual barcode modes, only the serial number barcode is printed.	BC: 7612320103052
Result	OK or NOK depending if tightening completed respecting the configured parameters	OK
Program	The program number used for the tightening	PR: 8
Model	The screwdriver model used for the tightening	KDS-PL10
Serial Nr	The serial number of the screwdriver	s/n: 1814914
Target	The target torque or angle	TARGET: 2.0Nm
Screw Time	The duration of the tightening in seconds	ST: 1.23
Speed	The closing speed of the tightening	S: 600rpm
Screw count	Number of *successfully* tightened screws / total number of screws in program	Screw: 1/8
Sequence	Current sequence and program within sequence (program is positional: current/total)	Seq: 1/3
Torque	Final torque of the tightening	T: 1.99Nm
Angle	Final angle of the tightening	A: 114deg
Date-time	Date time of the tightening	18/01/18 17.44.50
Notes or Errors	Notes such as "PROGRAM END" for OK results, or error details such as "Err Angle Max" for NOK results	PROGRAM END, *or* Err Angle Max

For example:

```
BC: 7612320103052 OK PR: 8 KDS-PL10 s/n: 1814914 TARGET: 2.0Nm ST:
1.23 S:600rpm Screw:1/8 Seq: A 1/1 T: 1.99Nm A: 114deg 18/01/18
17.44.50
NOK PR:26 KDS-MT1.5 s/n: 1964211 TARGET:10.00lbf.in ST: 10.166
S:300rpm Screw:0/7 Seq:1/1 T: 0.00lbf.in A: 20008deg 20/02/30
11.33.10 Err Angle Max
```

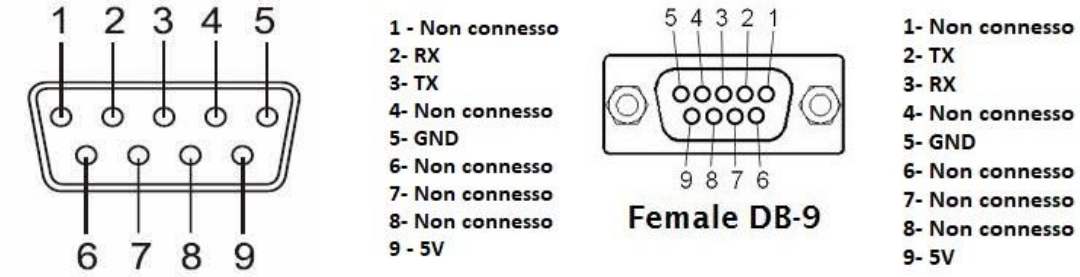

PIN	NAME	FUNCTION
2	RX	RS232 reception.
3	TX	RS232 transmission.
5	GND	Common to every input. Signals have to be enabled making contact between the desired signal and this pin (GND).
9	+5V	Not used

Connecting a barcode scanner

The K-DUCER is compatible with RS-232 capable barcode scanners such as Kolver P/N 020050 (1D barcode scanner) and 020051 (2D barcode scanner).
Any barcode type supported by the scanner will work with the K-DUCER, but the total length of each barcode must be 16 characters or less for PROGRAM and SEQUENCE barcodes, or 63 characters or less for SERIAL NUMBER barcodes.

Connect the barcode scanner to the CN2 9-pin male serial connector. If using a 2D barcode scanner such as Kolver P/N 020051, you must also connect the external power supply included with the scanner.

The barcode scanner should be configured with the following serial connection parameters:

RS232 – 9600 baud – 8 data bits – 1 stop bit – no parity

For Kolver P/N 020051, this is done by scanning the included configuration barcode.
For other scanners, refer to their user manual.

Once connected, select one of the five barcode modes to work with: see BARCODE MODE.

Connecting a bit-tray or switchbox (CBS880, SWBX88)

To utilize the accessories SWBX88 (switchbox) and CBS880 (socket tray) you'll need the M-F serial cable (code 881007) and the KIT KDU ADAPTER WITH SW AND CBS (code 010410). Connect and secure the adapter to the accessory, then the M-F 9-pin cable from the adapter to the CN4 connector on the K-DUCER:



Refer to the GENERAL SETTINGS menu and PROGRAMS menu chapters for information on how to configure the CBS880 accessory.

If at any time: no bits are lifted, or more than one bit is lifted, or if REMOTE PR/SEQ is set to SWBX/CBS and an incorrect bit is lifted, the controller will remain locked.

Note: if you use less than 8 sockets with the CBS880 accessory, it is recommended to physically disable the unused sockets by turning off the corresponding DIP switches inside the CBS880 accessory, shown in the picture below. Refer to the CBS880 product manual for more information.

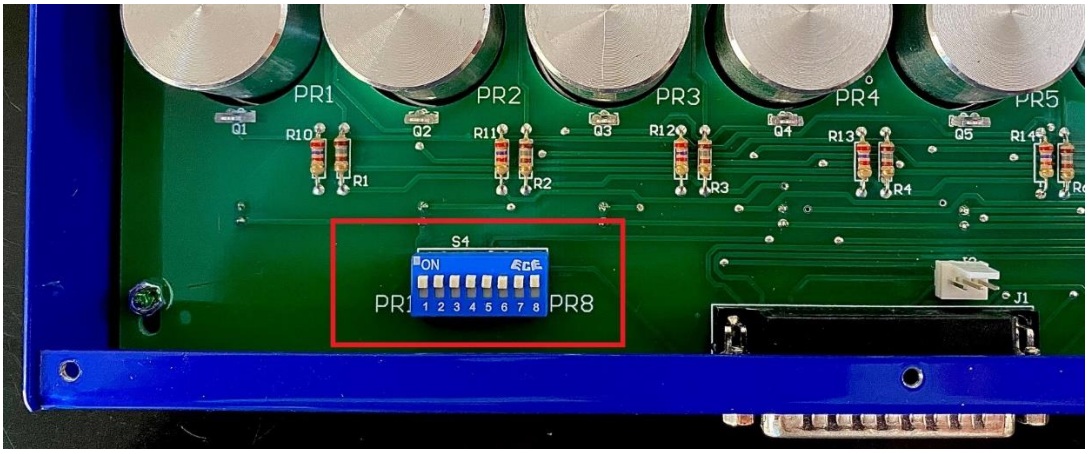

CONFIGURING THE K-DUCER

ADVANCED TORQUE CONTROL STRATEGIES

Certain applications may require the use of tightening strategies more advanced than target torque or angle control.

For these applications, the K-DUCER offers Running Torque Compensate, Prevailing Torque, and multi-step program options. These terms are defined in the TERMINOLOGY section.

These strategies are disabled by default, and if your application does not require them, you may skip this section.

RUNNING TORQUE

Use running torque to apply the **clamping torque**, letting the **closing torque** vary according to the **running torque** encountered and measured during the running torque window.
The goal in this case is to apply a consistent amount of clamping force on the assembly, as opposed to a consistent amount of **closing torque**.
If the running torque value is expected to be higher than the target clamping torque value, the application may also require the use of prevailing torque phase, to be used in conjunction with and during the running torque phase.

Seating point determination

First, it is necessary to understand the morphology and torque rate of the joint. Perform a series of at least 10 tightening with a target torque near the maximum closing torque allowed by the application (inclusive of running torque), without using any running/prevailing/downshift settings. Follow all precautions necessary and note that this may damage the assembly.

Note down the following information from torque and angle graphs and/or graph data provided by the K-DUCER. You can also take advantage of the free K-Expand software to readily analyze the graphs point-by-point.

- Seating point, in terms of both torque and angle, and of their variability
- Running torque

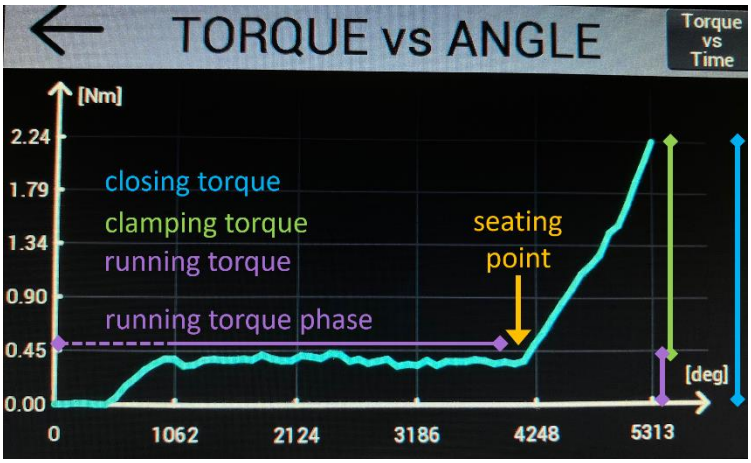

Example

Target torque: 2.22 Nm

Seating point: 4000°

Running torque estimate: 0.3 Nm

(Running torque mode OFF)

Test with running torque

In the RAMP, TIME, & PV TORQUE menu configure the running torque WINDOW by angle (or time), such that it always ends **before** the seating point. Use a window max value of at most the lowest seating angle point of the test tightening.

Select appropriate running torque MIN-MAX bounds, such that the running torques measured fall within the bounds, while retaining the ability to detect incorrect values.

Select peak or average VALUE depending on the requirements of the application and shape of the graph.
If the running torque slopes upward, it may be appropriate to use the peak value.
If the running torque is constant and varies a lot, for example, if it is a very low torque value relatively to the range of the screwdriver, it may be more appropriate to use the average value.

Perform another batch of tightenings, and check if the detected running torque value is the one expected.

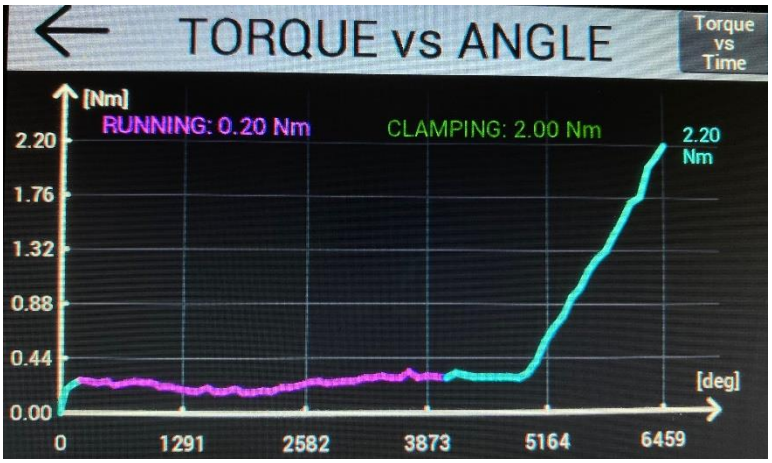

Example

Target torque: 2.20 Nm

Running torque mode:
Average - Compensate

Window: 270° – 4000°

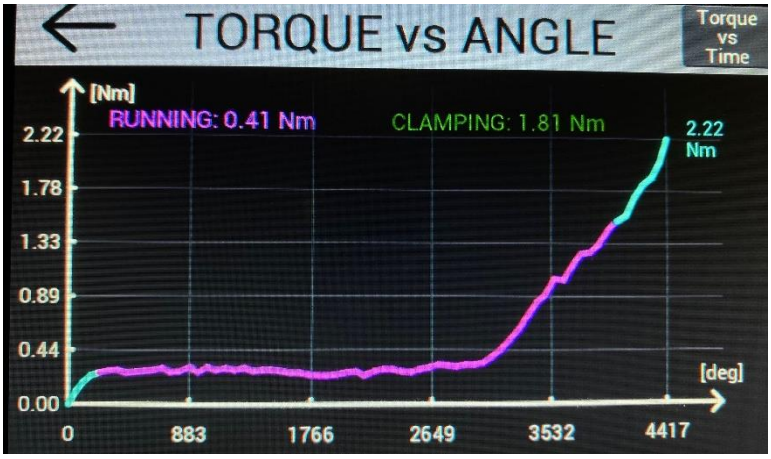

Example

The running torque window was incorrect: it extended past the seating point.

The severity of the problem was reduced by using the average running torque value.

Note: if the running torque value is higher than the desired clamping torque value, you will also need to superimpose a prevailing torque phase to the running torque phase, to enable the screwdriver to finish the running torque phase at a higher torque value than the TARGET Torque, as the running torque value is not added to the target torque until the end of the running torque window.

Final test with running torque compensation

After fine-tuning the running torque detection.
Perform another batch of tests and analysis to verify the desired result.

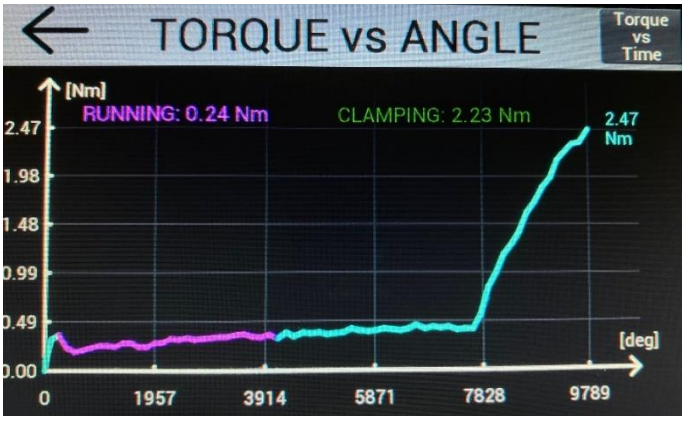

Example

Target torque: 2.22 Nm

Running torque mode:
Average - Compensate

Window: 270° – 4000°



Example

The running torque value is greater than the clamping torque target

This requires the prevailing torque phase during the running torque phase

PREVAILING TORQUE

Self-threading applications may require a prevailing torque strategy, if the initial torque required to overcome the self-threading action is higher than the target closing torque. Applications where the running torque value is expected to be higher than the clamping torque target may also require a prevailing torque phase, ending at or after the end of the running torque phase.

In the RAMP, TIME, & PV TORQUE menu, activate the prevailing torque mode with torque and angle

Warning: for the duration of the prevailing torque phase, the screwdriver will only stop if it reaches its maximum torque possible.

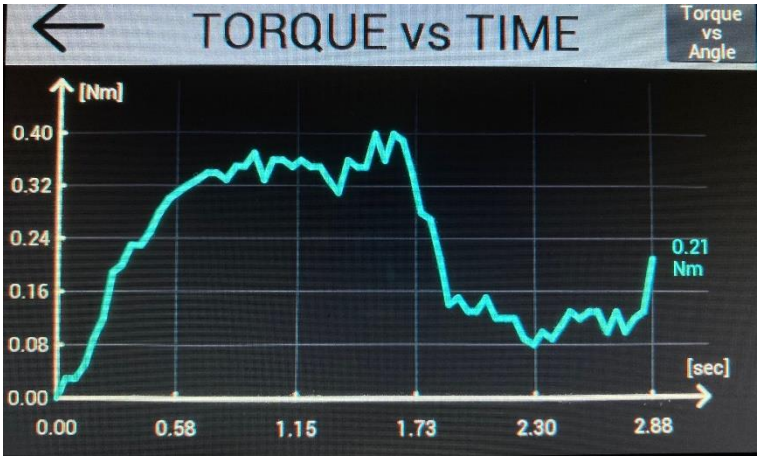

A tightening with target torque 0.21 Nm, and prevailing torque phase for 2.0 seconds. Note how the maximum torque is higher than the final torque. This type of profile is only possible through the prevailing torque setting.

MULTI-STEP AND COMBINED PROGRAMS

To reverse the screwdriver at the beginning of the tightening, or after reaching the closing torque, or to change the direction of tightening, refer to the corresponding options in the REV & PRE-REV menu.

To combine multiple programs in a single tightening, you can configure a sequence with the Program transition box set to “auto”.
The sequence will then transition between two or more programs automatically while the operator continues to hold the screwdriver lever. The screwdriver will stop momentarily in-between programs. Activate the LEVER ERROR setting for each program involved to raise an error if the operator stops holding the lever during or in between the programs.

This allows to have multi-program tightening strategies.

MAIN MENU

From the main screen, enter the main menu by tapping on the ☰ button on the top right.

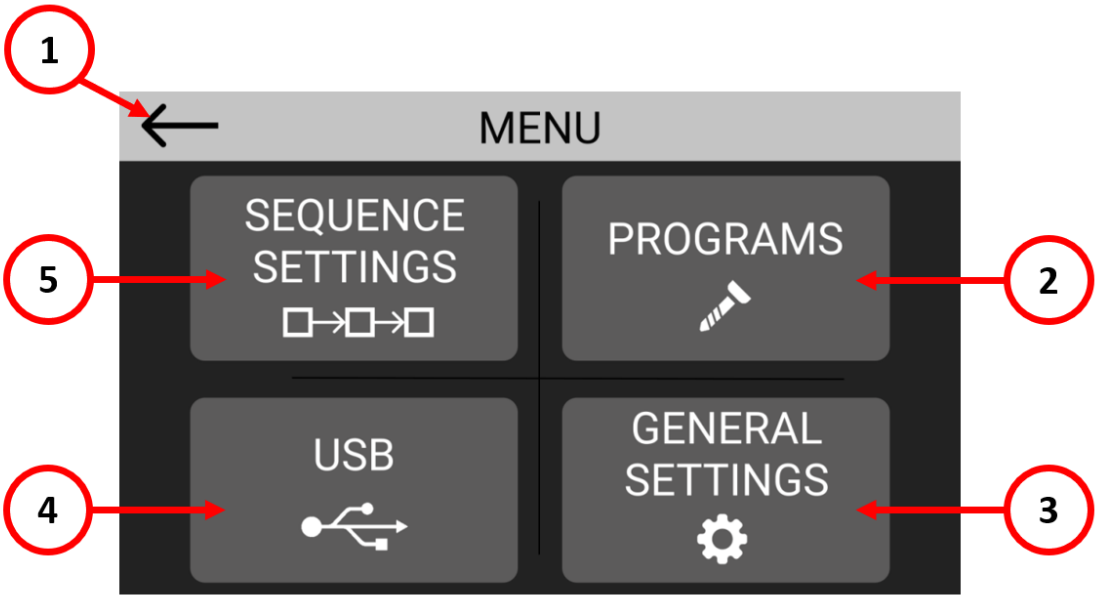

(1) Touch to return to the main screen.
(2) Touch to enter the program configuration menu, to configure parameters such as torque, angle, runtime, for each program. You can configure up to 64 different programs.
(3) Touch to enter the general settings menu, to configure general parameters such as passcode lock, I/O and MODBUS settings, kolver accessories, language, etc.
(4) Touch to enter the USB menu to save or load settings from a USB drive. Note: if a USB drive is connected, the unit automatically saves all screwdriving results in a text file.
(5) Touch to enter the sequence configuration menu, to configure a sequence of up to 16 different programs and the type of transition between each program.

PROGRAMS menu

Programs represent batches of one or more screws sharing the same parameters (torque, angle, speed, etc). With the K-DUCER series, you can define up to 64 different programs as well as assign a barcode to each for automatic selection with a barcode scanner.

Tap the Programs button from the main menu to enter the programs menu.
Select one of 64 programs to edit by tapping on the program number or the arrows on the top bar.
Enter one of the four sub-menus to modify the desired parameters for the program selected.

PROGRAMS menu tree

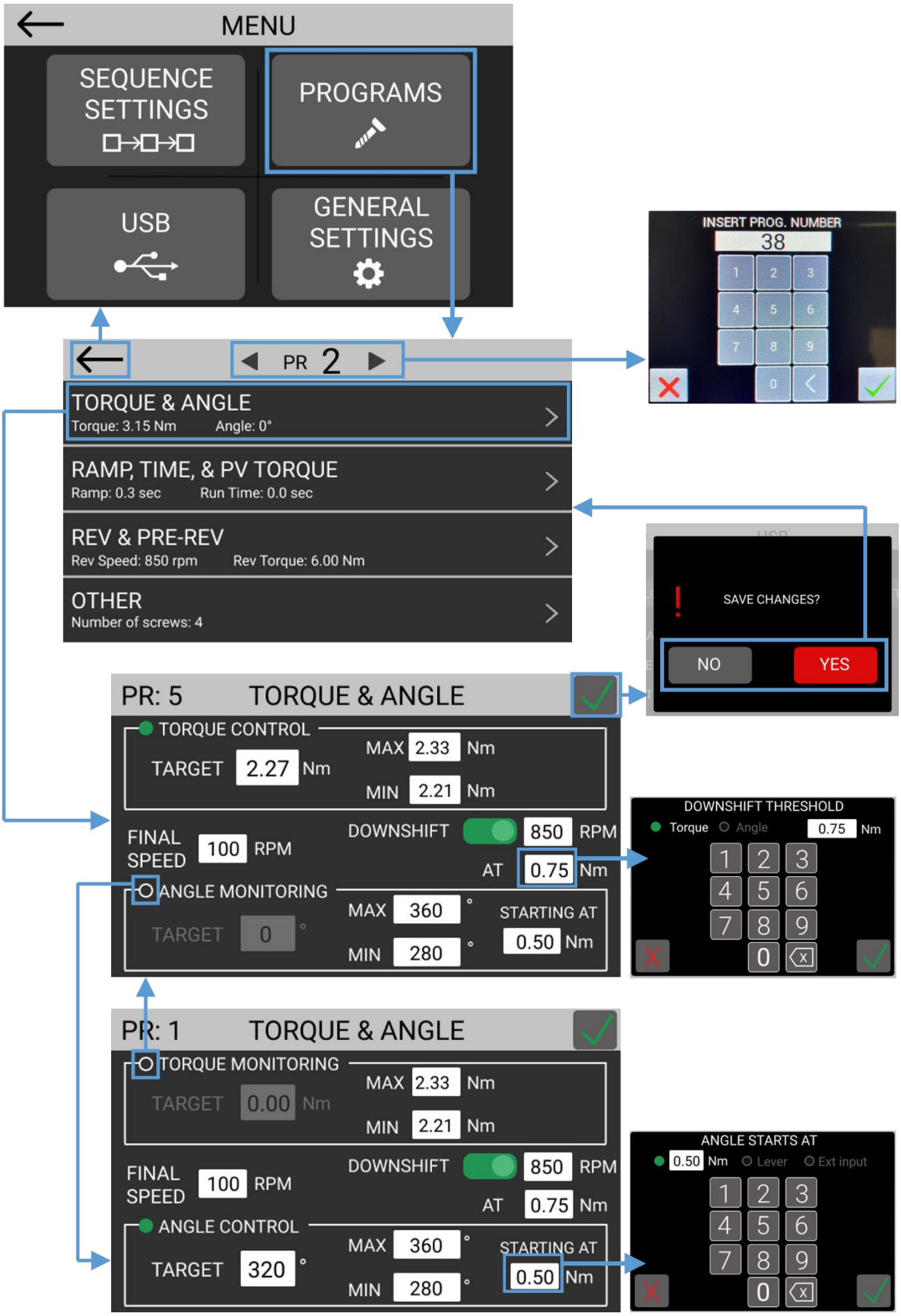


MENU
SEQUENCE SETTINGS
PROGRAMS
USB
GENERAL SETTINGS
INSERT PROG. NUMBER
38
1 2 3
4 5 6
7 8 9
0
PR 2
TORQUE & ANGLE
Torque: 3.15 Nm Angle: 0°
RAMP, TIME, & PV TORQUE
Ramp: 0.3 sec Run Time: 0.0 sec
REV & PRE-REV
Rev Speed: 850 rpm Rev Torque: 6.00 Nm
OTHER
Number of screws: 4
SAVE CHANGES?
NO
YES
PR: 1 RAMP & TIME
RAMP 0.5 sec
RUN TIME 20 sec
MIN TIME 1.5 sec
MAX TIME 20 sec
PREVAILING TORQUE Time Angle Off
0.4 s
PAGE 1/2
PR: 1 RUNNING TORQUE
RUNNING TORQUE Time Angle Off
WINDOW 180 - 1200
VALUE Average Peak
MIN - MAX 0.10 - 0.65 Nm
MODE Compensate Monitor
PAGE 2/2
SAVE CHANGES?
NO
YES


MENU
SEQUENCE SETTINGS
PROGRAMS
USB
GENERAL SETTINGS
INSERT PROG. NUMBER
38
1
2
3
4
5
6
7
8
9
0
PR 2
TORQUE & ANGLE
Torque: 3.15 Nm
Angle: 0°
RAMP & TIME
Ramp: 0.0 sec
Run Time: 0.0 sec
REV & PRE-REV
Rev Speed: 600 rpm
Rev Torque: 6.00 Nm
OTHER
Number of screws: 2
SAVE CHANGES?
NO
YES
PR: 1
REV & PRE-REV
REVERSE SPEED
600
RPM
REVERSE TORQUE
6.00
Nm
PRE-TIGHTENING REVERSE
Time
Angle
Off
2.0
s
PRE-REV DELAY
1.0
Sec
PAGE 1/2
PR: 1
REV & PRE-REV
AUTO-REVERSE AFTER TORQUE
Time
Angle
Off
off
°
AUTO-REV DELAY
1.25
sec
PAGE 2/2
SAVE CHANGES?
NO
YES

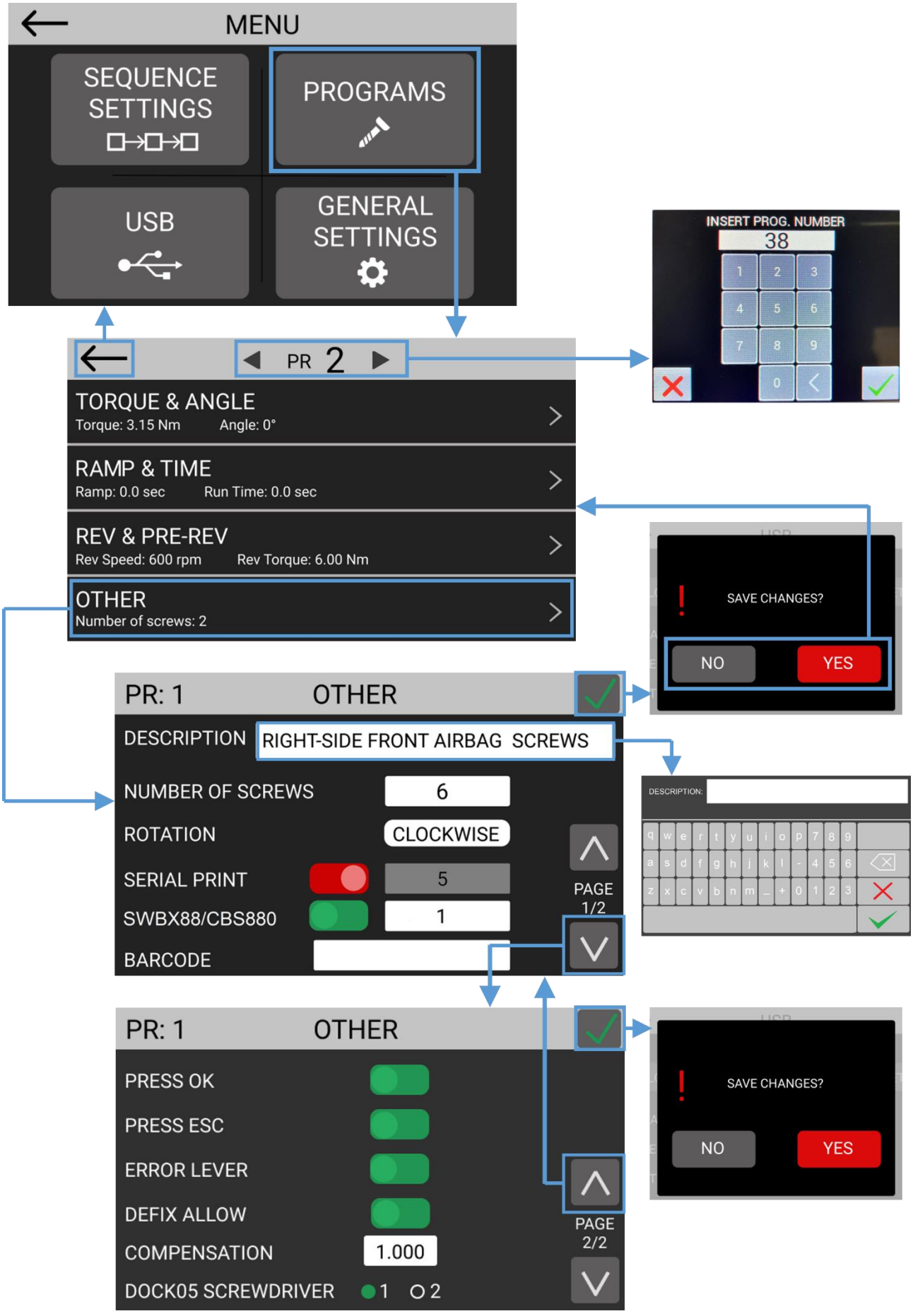
MENU
SEQUENCE SETTINGS
PROGRAMS
USB
GENERAL SETTINGS
INSERT PROG. NUMBER
38
PR 2
TORQUE & ANGLE
Torque: 3.15 Nm
Angle: 0°
RAMP & TIME
Ramp: 0.0 sec
Run Time: 0.0 sec
REV & PRE-REV
Rev Speed: 600 rpm
Rev Torque: 6.00 Nm
OTHER
Number of screws: 2
SAVE CHANGES?
NO
YES
PR: 1
OTHER
DESCRIPTION
RIGHT-SIDE FRONT AIRBAG SCREWS
NUMBER OF SCREWS
6
ROTATION
CLOCKWISE
SERIAL PRINT
5
SWBX88/CBS880
1
BARCODE
PAGE 1/2
DESCRIPTION:
PRESS OK
PRESS ESC
ERROR LEVER
DEFIX ALLOW
COMPENSATION
1.000
DOCK05 SCREWDRIVER
1
2
PAGE 2/2

TORQUE & ANGLE menu

Note: carefully choosing the right combination of speed and downshift settings for the application will maximize the precision and lifetime of the tool while minimizing your assembly cycle time. Review the Determining the appropriate program settings section.

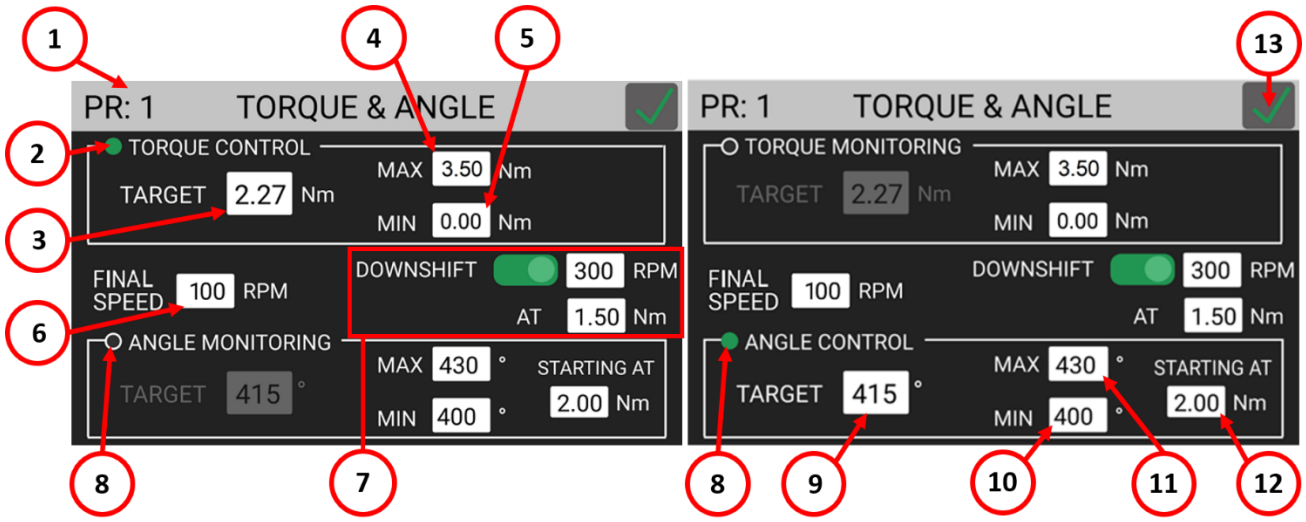

(1) Program Number

Indicates the program that is currently being edited. You can select a different program to edit from the previous screen.

(2) TORQUE CONTROL / ANGLE MONITORING flag

Tap to select Torque Control and Angle Monitoring mode.
In this mode, the screw is tightened down to the target torque, and the angle (the number of revolutions of the screw, in degrees) reached at the target torque is measured. The STARTING AT (12) setting controls the starting point for the angle measurement (at torque threshold, at lever pressed, or at external signal received).

(3) TARGET Torque

Tap to set the target torque. Only available in Torque Control/Angle Monitoring mode. For prevailing torque settings, see the Ramp & Time menu.
Note: continuous use at or over 80% of the screwdriver's nominal torque range is not recommended.

(4) MAX Torque

If the torque measured at the end of the tightening exceeds the MAX Torque value, the tightening will be considered unsuccessful (NOK) and a corresponding error will be raised. Applicable to Torque Control as well as Angle Control modes.

(5) MIN Torque

If the torque measured at the end of the tightening is below the MIN Torque value, the tightening will be considered unsuccessful (NOK) and a corresponding error will be raised. Applicable to Torque Control as well as Angle Control modes.

(6) FINAL SPEED

Tap to select the tightening speed of the screwdriver, in RPM.

If the (7) DOWNSHIFT function is used, this will be the final tightening speed that the screwdriver will downshift to after the selected "AT" threshold is reached.
For the reverse speed of the screwdriver, see the REV & PRE-REV. Note that you can invert the tightening and untightening directions of rotation via the PROGRAMS > OTHER menu.

(7) DOWNSHIFT

The DOWNSHIFT function lets you execute the tightening in two phases: a high speed approach (enter the speed in the "RPM" field), followed by a lower (6) FINAL SPEED after a certain torque or angle threshold is reached.
OFF (red): the screwdriver will run at the (6) FINAL SPEED for the entire tightening.
ON (green): the screwdriver will run at the entered "RPM" speed until a certain torque or angle is reached (AT torque/angle value), at which point it will downshift to the (6) FINAL SPEED for the remainder of the tightening.
If using an angle threshold, the angle is counted in accordance with the STARTING AT setting.

(8) ANGLE CONTROL / TORQUE MONITORING flag

Tap to select Angle Control and Torque Monitoring mode.
In this mode, the screw is tightened down to the target angle (number of revolutions of the screw, in degrees), while the torque is measured.

(9) TARGET Angle

Tap to set the target angle. Only available in Angle Control/Torque Monitoring mode.

(10) MIN Angle

If the angle measured at the end of the tightening is below the MIN Angle value, the tightening will be considered unsuccessful (NOK) and a corresponding error will be raised. Applicable to Torque Control as well as Angle Control modes.

(11) MAX Angle

If the angle measured at the end of the tightening exceeds the MAX Angle value, the tightening will be considered unsuccessful (NOK) and a corresponding error will be raised. Applicable to Torque Control as well as Angle Control modes.

(12) STARTING AT

Tap to select the starting point for the angle measurement. Three modes are available:

- **Torque threshold**: the angle measurement starts after the torque reaches this value
- **Lever**: the angle measurement starts as soon as the screwdriver level is pressed
- **Ext In**: the angle measurement starts after the IN-ANG external I/O signal is received

(13) Exit/Save key

Tap to return to the previous menu and save or discard any changes made.

RAMP, TIME, & PV TORQUE menu

Note: for Prevailing Torque and Running Torque settings, please also review the ADVANCED TORQUE CONTROL STRATEGIES section.

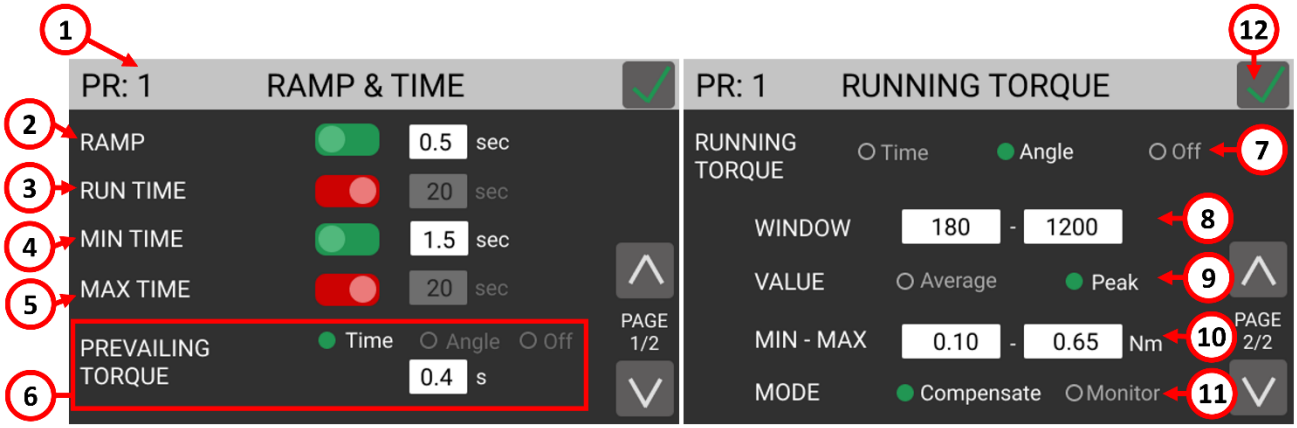

(1) Program number

Indicates the program that is currently being edited. You can select a different program to edit from the previous screen.

(2) RAMP

The ramp function makes the screwdriver gradually accelerate to the target SPEED
Enter a time between 0.3 and 3 seconds to set the duration of the ramp phase.
OFF: the screwdriver starts immediately turning at the target SPEED when the lever is pressed (or when the screwdriver starts through remote control).
ON: the screwdriver speed will ramp up to the target SPEED in the time set.
If you wish to display an error when the screwdriver reaches target torque or angle during the ramp phase, use the (4) MIN TIME function with a timer value equal to the RAMP timer.

(3) RUN TIME

The RUN TIME function makes the screwdriver stop after the set timer, irrespective of the torque or angle reached.
ON: the screwdriver will stop after the set amount of time or when the torque or angle targets are reached, whichever event happens first. If the run time is reached before the target torque or angle, then the torque and angle reached at the time the screwdriver stops will be displayed and will be used to determine whether the result was OK or NOK depending on the min/max limits set on torque, angle, and/or time.
OFF: the screwdriver will turn indefinitely until the target or max limits set on torque, angle, and/or time are reached.

(4) MIN TIME

The MIN TIME function makes the screwing result NOK (error) if the target torque or angle is reached before the set minimum time.

ON: "Below minimum time" error will be displayed if target torque or angle is reached before the set minimum time, counting from the moment the lever is pressed or a remote start signal is received.

OFF: this functionality is disabled.

(5) MAX TIME

The MAX TIME function makes the screwing result NOK (error) if the target torque or angle is not reached before the set maximum time.

ON: "Over maximum time" error will be displayed if target torque or angle is not reached before the set maximum time, counting from the moment the lever is pressed or a remote start signal is received.

OFF: this functionality is disabled.

(6) PREVAILING TORQUE

The PREVALING TORQUE function makes the screwdriver work at maximum torque for a set time period or angle selected.

WARNING: This function is useful for applications where the prevailing torque is higher than the final target torque (for example self-tapping screws or locknuts). Please use this function with utmost attention because an incorrect use can damage both the assembly and the screwdriver!

The time is counted from the moment the lever is pressed or a remote start signal is received.

The angle is counted in accordance with the STARTING AT setting.

This function can be overlapped with the RAMP function.

The SPEED setting is respected during the prevailing torque phase.

If the torque measured during the prevailing torque time exceeds the maximum torque achievable by the screwdriver, in other words, if the screwdriver stops turning during the prevailing torque phase, "Error pvt time" will be displayed.

If OFF, this functionality is disabled.

(7) RUNNING TORQUE

The RUNNING TORQUE function makes the screwdriver **add (compensate)** the peak or average torque measured during the set window to the final target torque, in real time. This function is required in select aerospace and helicoil application, where a fixed "clamping torque" is to be applied on top of a variable "running torque" ("friction torque") encountered during the rundown.

This function can only be activated in Torque Target mode (not in Angle Target mode).

Refer to the RUNNING TORQUE section for more information.

Off: the function is not active.

Angle: the running torque is measured within the angle window selected, counted in accordance with the STARTING AT setting.

Time: the running torque is measured within the time window selected, starting from the moment the screwdriver lever (or remote lever command) is pressed.

Note that the running torque can be combined with the PREVAILING TORQUE function, for those situations where the running torque value is expected to be higher than the TARGET Torque value (**Running Torque** greater than **Clamping Torque**).

(8) WINDOW

Enter the time or angle window during which the running torque will be measured.

(9) VALUE

Average: the running torque value will be the average of the torque values measured during the running torque window.

Peak: the running torque value will be the maximum torque value measured during the running torque window.

(10) BOUNDS (MIN – MAX)

If the running torque falls outside the min/max bounds, the tightening will stop with a corresponding error.

If using **Average** VALUE mode, the tightening will continue until the running torque window completes, and the average value will be checked against the min/max bounds.

If using **Peak** VALUE mode, the tightening will end immediately if the measured torque exceeds the max BOUND at any time within the running torque window.

(11) MODE

Compensate: the running torque value will be added to the TARGET Torque in real time, to achieve a fixed amount of **clamping torque**. The torque result reported on the main screen will correspond to the **clamping torque** applied, and the **running torque** value will be reported below.

Monitor: N/A in the KDS-NT system. Running Torque will always run in "Compensate" mode.

Example of a tightening result using the RUNNING TORQUE Compensate function:

2.22 Nm clamping torque 0.19 Nm running torque 2.41 Nm total torque

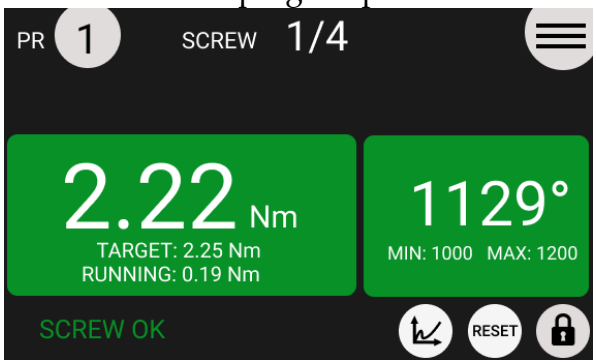

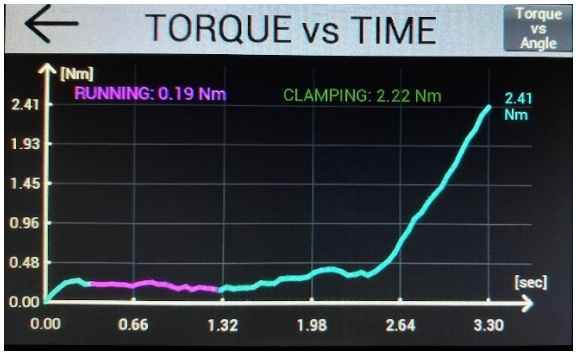

(12) Exit/Save Key

Tap to return to the previous menu and save or discard any changes made.

REV & PRE-REV menu

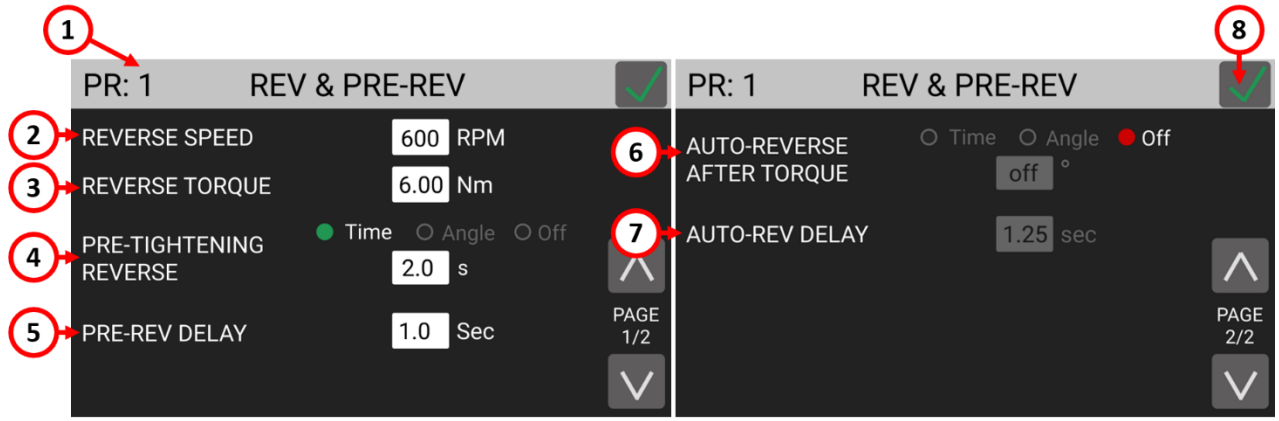

(1) Program number

Indicates the program that is currently being edited. You can select a different program to edit from the previous screen.

(2) REVERSE SPEED

Tap to select the untightening speed of the screwdriver, in RPM.

WARNING: This setting also applies to the PRE-TIGHTENING REVERSE and AUTO-REVERSE AFTER TORQUE functions.

Settings from the TORQUE & ANGLE and RAMP & TIME menu do not apply when untightening.

Note that you can invert the tightening and untightening direction of rotation via PROGRAMS > OTHER > ROTATION.

(3) REVERSE TORQUE

Tap to set the maximum reverse torque that the screwdriver will allow while untightening, within the range of the screwdriver selected.

WARNING: This setting also applies to the PRE-TIGHTENING REVERSE and AUTO-REVERSE AFTER TORQUE functions.

If you're using an open-end wrench attachment, the reverse torque should be set to MIN value in order to bring the wrench back to the correct position.

(4) PRE-TIGHTENING REVERSE

This function makes the screwdriver turn in the reverse direction for a set time duration or angle after the target torque or angle are reached.

The speed and torque utilized in the PRE-TIGHTENING REVERSE phase are set in the REVERSE SPEED and REVERSE TORQUE settings above.

If OFF, this functionality is disabled.

(5) PRE-REV DELAY

The amount of idle time between the end of the PRE-TIGHTENING REVERSE phase and the tightening phase. The lever must remain pressed or the remote start command must remain active during this idle time. Cannot be set to less than 0.3 seconds. Only active if the PRE-TIGHTENING REVERSE function is not OFF.

(6) AUTO-REVERSE AFTER TORQUE

This function makes the screwdriver turn in the reverse direction for a set time duration or angle after successfully completing the tightening phase.

The speed and torque utilized in the PRE-TIGHTENING REVERSE phase are set in the REVERSE SPEED and REVERSE TORQUE settings above.
This function activates only if the screw result from the tightening phase was OK. If there was an error in executing or completing the tightening phase, the screwdriver will not proceed with the AUTO-REVERSE AFTER TORQUE phase.
WARNING: the lever must remain pressed or the remote start command must remain active during the entire AUTO-REVERSE AFTER TORQUE phase, otherwise the screwing result will be NOK and an error will be raised.
If OFF, this functionality is disabled.
Note: if the tightening phase was successful, the OK signal will not be raised until the completion of the AUTO-REVERSE AFTER TORQUE phase. The TORQUE and ANGLE results displayed at the end of the AUTO-REVERSE AFTER TORQUE phase will correspond to the torque/angle results from the tightening phase, and not those from the AUTO-REVERSE AFTER TORQUE phase.

(7) AUTO-REV DELAY

The amount of idle time between the end of the tightening phase and the AUTO-REVERSE AFTER TORQUE phase. The lever must remain pressed or the remote start command must remain active during this idle time. Cannot be set to less than 0.3 seconds. Only active if the AUTO-REVERSE AFTER TORQUE function is not OFF.

(8) Exit/Save Key

Tap to return to the previous menu and save or discard any changes made.

OTHER menu

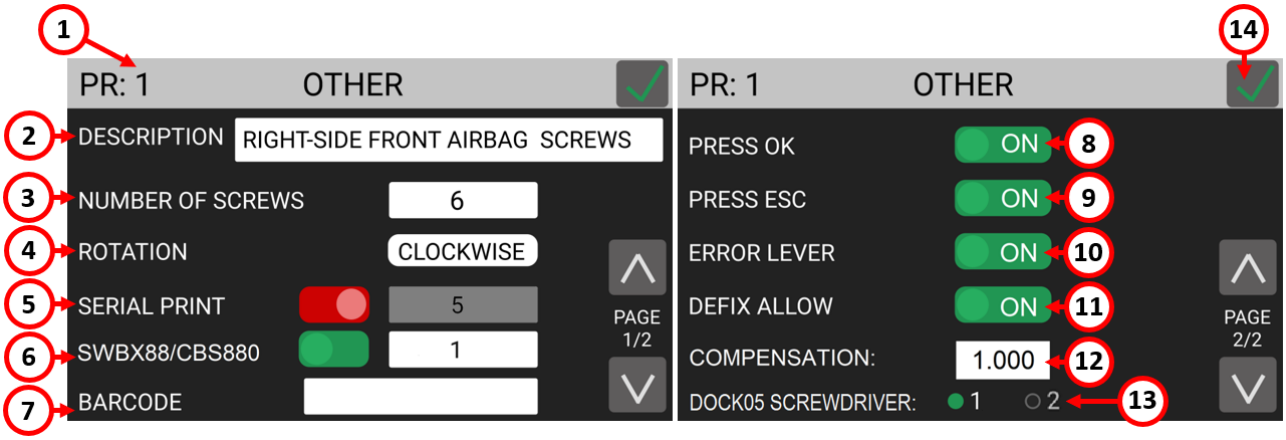

(1) Program number

Indicates the program that is currently being edited. You can select a different program to edit from the previous screen.

(2) DESCRIPTION

Tap to enter a program description of up to 30 alphanumeric characters. The description will be displayed in the main screen.

(3) NUMBER OF SCREWS

Tap to set the number of screws (0 to 99) for this program. Also referred to as "batch size" in the industry. The end of program signal will be raised upon the successful tightening of the last screw in the program.

Enter zero to disable screw counting for this program.

Note: a program with NUMBER OF SCREWS set to zero behaves the same as a program with NUMBER OF SCREWS set to one when utilized in a sequence (SEQUENCE menu).

(4) ROTATION

Tap to set the direction of rotation of the screwdriver for the tightening phase. All of the screwdriver functions (angle measurements, direction of rotation for reverse phase, etc.) will adapt to the selected direction of rotation.

(5) SERIAL PRINT

Tap to enable and set a value from OFF to 5. The value identifies the number of line feeds (empty lines) printed between a results string and the next on the serial ports (CN2 and CN4) and serial printer accessory. Affected by the RESULTS FORMAT setting. If OFF, no data will be transmitted through CN2 or CN4.

(6) SWBX88/CBS880

Tap to enable and utilize the SWBX88 or CBS880 Kolver accessories with the current program being edited.

Enter 1 through 8 to assign the current program (Program number) number to the corresponding physical slot (1 through 8) of the Kolver accessory.

(7) BARCODE

Tap to enter the SCAN BARCODE screen to assign a barcode to the current program being edited. To be used in conjunction with the BARCODE MODE: - ON PRG - in the GENERAL SETTINGS menu.

The PROGRAM barcode can be up to 16 alphanumeric characters. QR codes of up to 16 alphanumeric characters are supported, provided that the scanner is configured correctly (RS-232, 9600 baud, 8 data bits, 1 stop bit, no parity).

(8) PRESS OK

ON: the "press OK" screen will appear upon successful completion of the last screw of the program.

When this screen appears, the screwdriver will remain disabled until the operator taps OK on the touch screen, or until the "REMOTE OK" external signal is received.

OFF: the control unit will reset automatically when the lever is pressed or the remote start signal is received after the last screw of the program is successfully completed.

Note: the "press OK" screen will not appear if the NUMBER OF SCREWS is set to zero, even if enabled. If you want the "press OK" screen to appear after every screw, set NUMBER OF SCREWS to one.

Note: this setting is ignored if the program is being used within a sequence (job). The program transition setting within the sequence will define the behavior in this case.

(9) PRESS ESC

ON: the "press ESC" screen will appear whenever an error occurs during a tightening or untightening operation.

When this screen appears, the screwdriver will remain disabled until the operator taps ESC on the touch screen, or until the "REMOTE ESC" external signal is received.
OFF: the control unit will clear the error automatically when the lever is pressed or the remote start signal is received after the error occurs (in this case, the remote start signal must first be pulled down after the error occurs in order to re-start the tightening).

(10) LEVER ERROR

ON: an error will be raised if the lever is released before reaching the target torque, angle, and/or run time.
OFF: releasing the lever in the middle of a tightening will not result in an error signal, even if the target torque, angle, and/or run time have not been reached.

(11) DEFIX ALLOW

ON: the reverse button on the screwdriver is enabled for this program.
OFF: to disable the reverse button on the screwdriver for this program.
Note: the PRE-TIGHTENING REVERSE and AUTO-REVERSE AFTER TORQUE functionality can still be used when this setting is OFF.

(12) COMPENSATION

This setting changes the calibration factor for the current program. Default value is 1. The torque measured when working with the current program is multiplied by this factor. For example, if a torque value of 3 Nm is displayed with the COMPENSATION setting at 1, but you measure an effective torque value of 3.03 Nm with an external measurement tool, you modify the COMPENSATION setting to 0.99. Repeating the tightening with the same joint should now yield a torque value of 3 Nm (result of 3.03 Nm * 0.99) in both the K-DUCER and the external torque measurement tool.
This function is useful when the torque result measured by an external instrument is not in line with the result measured by the K-DUCER, provided you are sure that the external instrument is properly calibrated and showing the correct result.
This can happen when working on rigid joints or with angle heads, or when the KDS screwdriver is overdue for a calibration.
WARNING: This function changes the value of the calibration factor of the KDS screwdriver (for the current program only) and therefore must be used only in case of real need and with a full understanding of what is being modified. In all other cases it should be left at 1. Contact your Kolver representative when in doubt. See CALIBRATION for more details.

(13) DOCK05 SCREWDRIVER

N/A to the KDS-NT system.

(14) Exit/Save Key

Tap to return to the previous menu and save or discard any changes made.

SEQUENCE SETTINGS menu

Sequences, also referred to as “jobs” in the industry, are ordered series of up to 16 programs with the option to define how to transition between programs.
With the K-DUCER series, you can define up to 8 different sequences as well as assign a barcode to each for automatic selection via a barcode scanner.

Tap the Sequence Settings button from the main menu to enter the sequence menu.

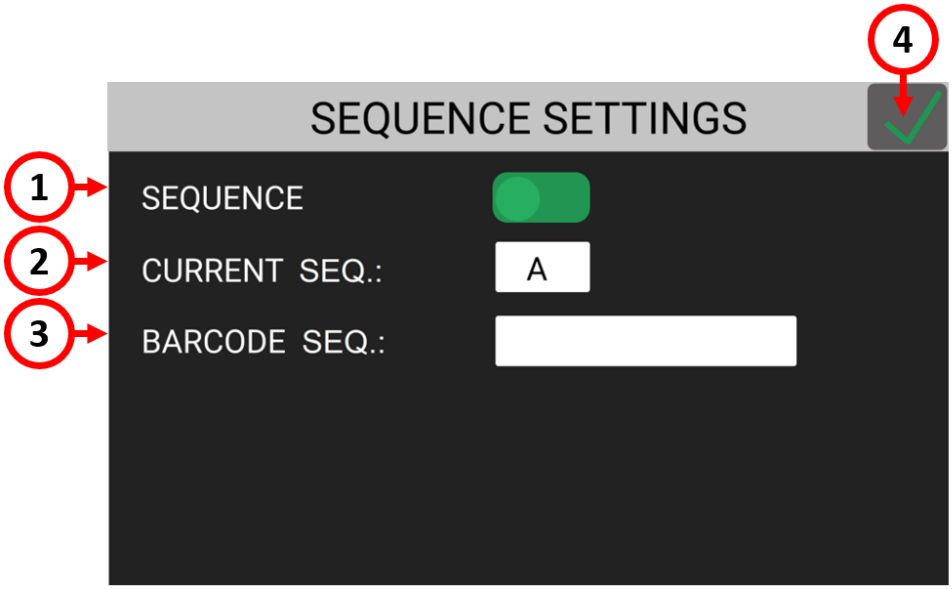

(1) SEQUENCE toggle

Tap the toggle to activate sequence mode in the main screen and work with sequences.

(2) CURRENT SEQ.

Tap the CURRENT SEQ. input field to enter the sequence edit menu for one of 8 sequences (A through H).
The sequence shown in the CURRENT SEQ. input field corresponds to the pre-selected sequence in the main screen.
You can also select a different sequence to work with directly from the main screen.
Manual selection of sequences is disabled if you utilize a REMOTE SEQ setting different from “Off”.

(3) BARCODE SEQ.

Tap to enter the SCAN BARCODE screen to assign a barcode to the sequence shown in CURRENT SEQ. To be used in conjunction with the BARCODE MODE: - ON SEQ - in the GENERAL SETTINGS menu.
The SEQUENCE barcode can be up to 16 alphanumeric characters. QR codes of up to 16 alphanumeric characters are supported, provided that the scanner is configured correctly (RS-232, 9600 baud, 8 data bits, 1 stop bit, no parity).

SEQUENCE SETTINGS menu tree

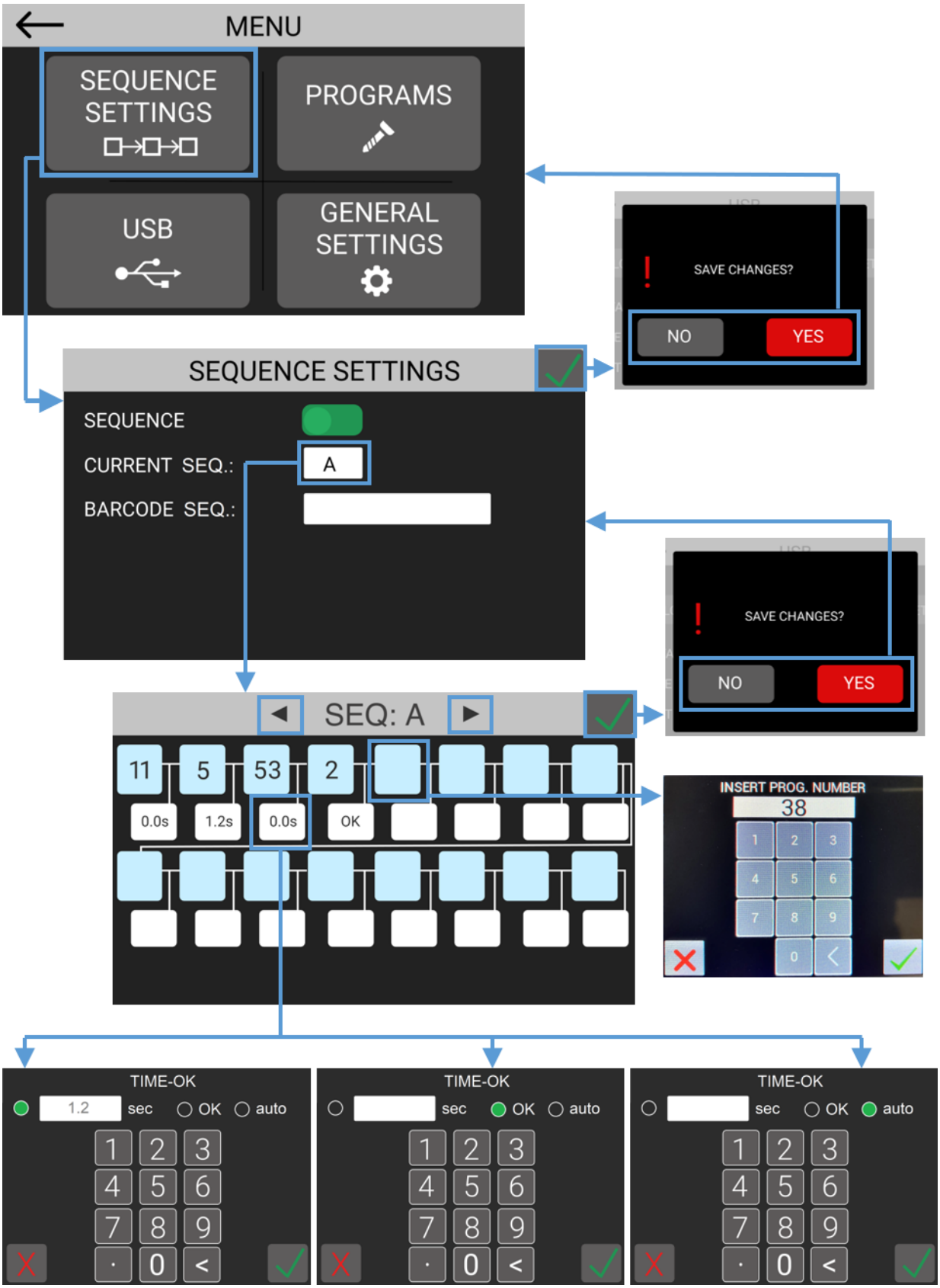

CURRENT SEQ. menu

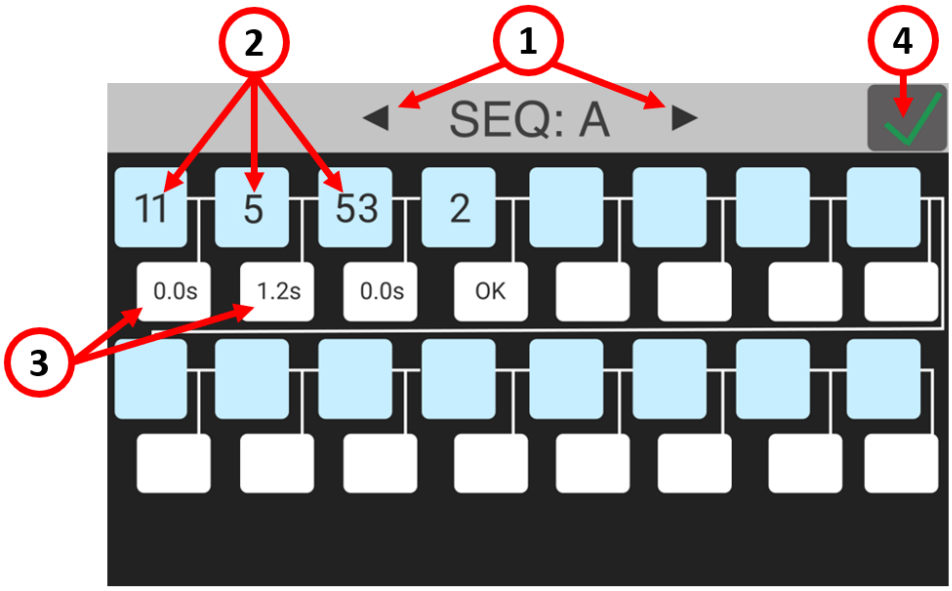

(1) Sequence letter

Indicates the sequence that is currently being edited.

Tap the arrows to select a different sequence to edit (A through H).

(2) Program number box

Tap to change or insert a program into the sequence. The sequence flows left to right, top to bottom.

You can insert any of the 64 programs into any of the 16 spots in the sequence. You can also insert the same program in different boxes if desired.

(3) Program transition box

Tap the box to define the transition behavior between the two corresponding programs in the sequence.

The transition behavior can be:

Time: when the previous program is successfully completed, the unit will automatically switch to the next program after the set amount of time, in seconds. The screwdriver will remain disabled until the transition timer completes. The timer begins counting as soon as the program is completed, even if the lever is not depressed or the remote start command is not removed. The allowable range is 0.3 to 10 seconds.

OK: when the previous program is successfully completed, the "press OK" screen will appear.

When this screen appears, the screwdriver will remain disabled until the operator taps OK on the touch screen popup, or until the "REMOTE OK" external signal is received.

Auto: when the previous program is successfully completed, the unit will immediately switch to the next program WITHOUT having to depress the screwdriver lever or pull down the remote start command. This setting can be useful if you require multiple closing torques or angles on the same joint without stopping in between, or to create a screwdriving operation that is not otherwise possible within the parameters of a single program.

WARNING: use this transition setting with care and only when strictly necessary, as the operator will not have any time to react to the program change.

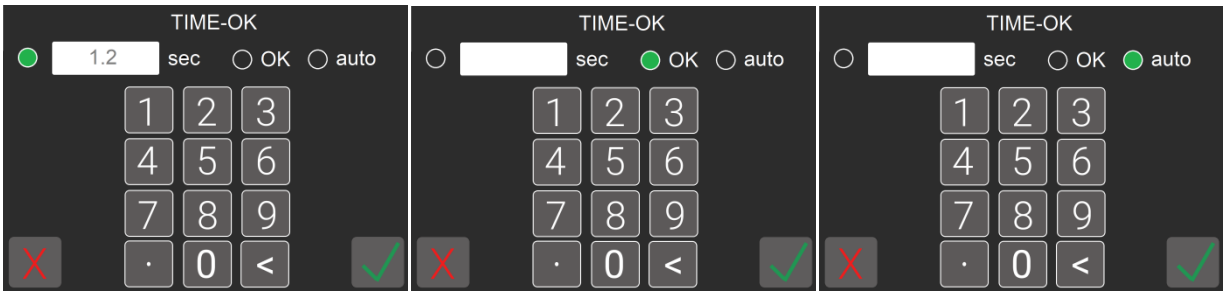

(4) Exit/Save Key

Tap to return to the previous menu and save or discard any changes made.

GENERAL SETTINGS menu

Tap the General Settings button from the main menu to enter the general settings menu. In this menu you can find information on the current KDS series screwdriver connected, configure Kolver accessories, configure I/O communications, add a password lock to the menu, and other settings that apply to all programs.

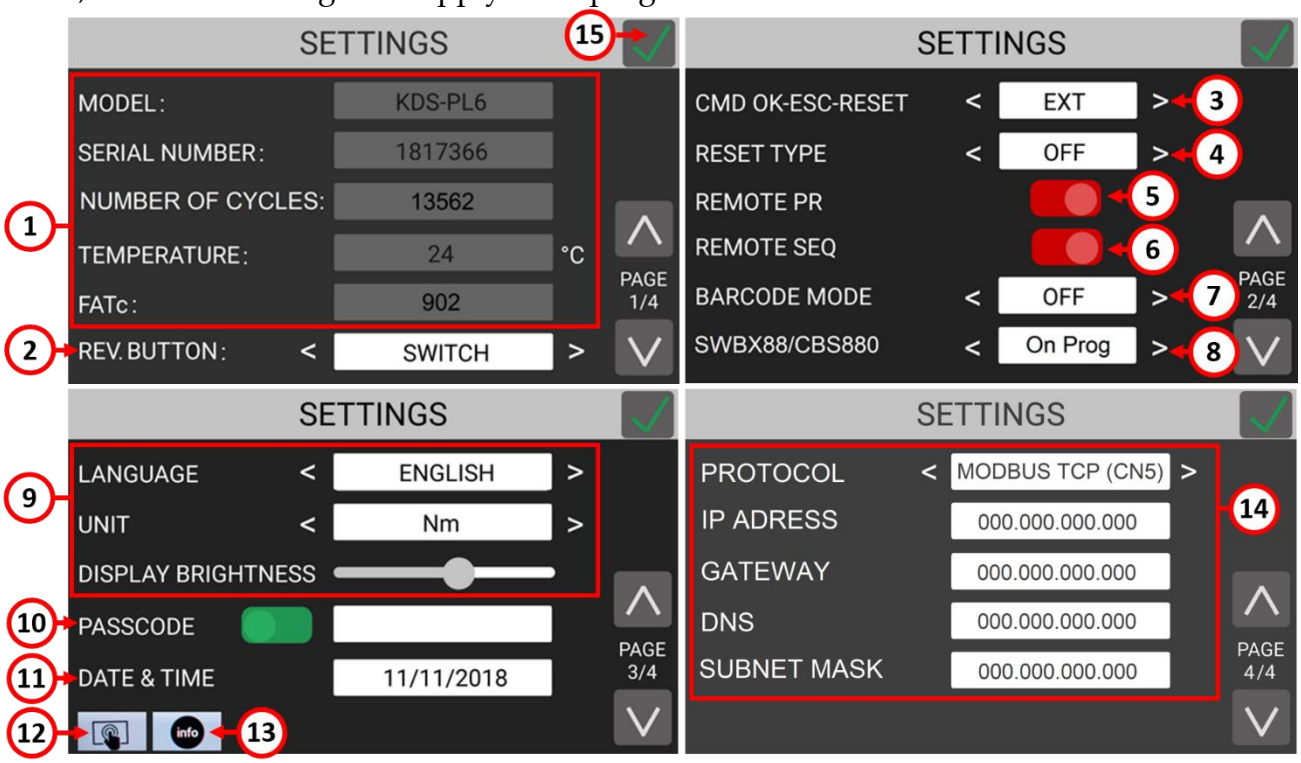

(1) TOOL INFO

Shows information of the connected screwdriver:

MODEL: the model of the connected screwdriver.

SERIAL NUMBER: the serial number of the connected screwdriver.

NUMBER OF CYCLES: the total cumulative number of cycles performed by the screwdriver. Also see MAINTENANCE AND CARE section.

TEMPERATURE: the temperature measured near the motor of the screwdriver, in degrees °C.

Note: exceeding a temperature of 40 °C will put the screwdriver in error protection mode and lock it until it cools down below 37 °C.

Some factors that can overwork and overheat the screwdriver include:

- Combination of high torque and low speed on very elastic joints (the screwdriver delivers high torques more efficiently at higher speeds)
- Very high duty cycles (< 3 seconds between rundowns), depending on difficulty (torque/elasticity) of the rundown
- High torques are defined as above 80% of the maximum nominal torque for the KDS screwdriver model. Consider upsizing the screwdriver model if most of your cycles are > 80% of the maximum torque

FATc: the calibration value of the transducer, also available in the calibration certificate of the tool). Modifying this value requires a Service Passcode. Contact Kolver to schedule a factory re-calibration or to obtain the service passcode and calibration instructions to perform the re-calibration in-house.

(2) REVERSE BUTTON

Defines the behavior of the reverse button on the KDS screwdriver and on the remote reverse command. The two modes available are BUTTON and SWITCH.

BUTTON mode: the screwdriver will run in reverse only while pressing the reverse button on the KDS screwdriver or while sending the remote reverse command.

SWITCH mode: pressing and releasing the reverse button on the KDS screwdriver or sending the remote reverse command will activate the reverse mode on the KDS screwdriver. Press the lever on the KDS screwdriver or send the remote start command while in this mode to make the screwdriver run in reverse. The LEDs on the screwdriver will flash while this mode is active and the screwdriver is not turning.

(3) CMD OK-ESC-RESET

Changes the source for the commands "OK", "ESC" (see "press OK" and "press ESC" settings on the PROGRAMS > OTHER menu), and "RESET" (see (4) below).

Choose "**INT**" (internal) to only allow these inputs from the touch screen display.

Choose "**EXT**" (external) to only allow these inputs to be received via external signals on the CN5 connector.

Choose "**INT+EXT**" to allow the OK/ESC/RESET commands from both the touch screen display and the external signals on CN5.

(4) RESET TYPE

Defines the behavior of the reset ("RST") button and external reset signal.

OFF mode: disables the reset button and external signal.

PRG: resets the screws made counter of the current program to zero.

SCREW: decreases the screws made counter of the current program by one.

SEQ: resets the current sequence back to the first program and resets the screws made counter to zero. This option is will only appear if SEQUENCE mode is active (SEQUENCE toggle > ON).

If any barcode mode is active and the current Screw count is zero, the RST button/signal will also cause the "scan barcode" screen to reappear.

(5) REMOTE PR

Toggle this to enable program selection via external input signals on the CN5 connector. Refer to the remote I/O chapter of this manual for more information.

(6) REMOTE SEQ

Toggle this to enable sequence selection via external input signals on the CN5 connector. Refer to the remote I/O chapter of this manual for more information.

(7) BARCODE MODE

Choose between OFF or one of five barcode modes:

OFF: disables/ignores barcode scans and settings

On S.N. ("on Serial Number"): on the main screen, the scan barcode screen will appear. Scanning a barcode will temporarily associate it with the current program. The barcode

will be printed in the corresponding results string on the serial port and on the corresponding Modbus field (see serial print and remote I/O chapters on this manual). The scan barcode screen will appear again after the current program completes on when a new program number is selected.

On PROG: on the main screen, the scan barcode screen will appear. Scanning a barcode will load the program containing the matching barcode. If there is no program with a matching barcode, the operator will be prompted to scan another barcode. The scan barcode screen will appear again after the loaded program completes. You can configure a unique barcode for each program via PROGRAM > OTHER > BARCODE.

On SEQ: on the main screen, the scan barcode screen will appear. Scanning a barcode will load the sequence containing the matching barcode. If there is no sequence with a matching barcode, the operator will be prompted to scan another barcode. The scan barcode screen will appear again after the loaded sequence completes. You can configure a barcode for each sequence via the BARCODE SEQ. setting on the SEQUENCE SETTINGS menu. This option is will only appear if SEQUENCE mode is active (SEQUENCE toggle > ON).

SN+Prog: This mode combines the "On Serial Number" and "On PROG" modes. First, the "scan serial number barcode" screen will appear. Then, after the first scan, the "scan PROG barcode" screen will appear. The program containing the barcode matching the "PROG" scan (second scan) will be loaded, while the first barcode scanned ("serial number") will be printed with the screwdriving results.

Both "scan barcode" screens will reappear after the program completes.

SN+Seq: This mode combines the "On Serial Number" and "On SEQ" modes. First, the "scan serial number barcode" screen will appear. Then, after the first scan, the "scan SEQ barcode" screen will appear. The sequence containing the barcode matching the "SEQ" scan (second scan) will be loaded, while the first barcode scanned ("serial number") will be printed with the screwdriving results.

Both "scan barcode" screens will reappear after the sequence completes.

(8) SWBX88/CBS880

Changes the working mode for the SWBX88 and CBS880 Kolver accessories:

OFF: disabled

ON PROG: the position selected on the accessory will load the program number containing the matching SWBX88/CBS880 setting (Programs > Other > SWBX88/CBS880).

ON SEQ: the position selected on the accessory will load the corresponding sequence. This sequence letters are matched to the numbers alphabetically (A-1, B-2, …, H-8). This option is will only appear if SEQUENCE mode is active (SEQUENCE toggle on the Sequence Settings menu).

Also see: Connecting Kolver accessories SWBX88, CBS880

(9) LANGUAGE / UNIT / BRIGHTNESSS

LANGUAGE: choose the display language: English, Italian, French, German, Spanish, Portuguese.

UNIT: choose the measurement units for torque: Nm, lbf.in, kgf.cm, ozf.in, cNm

DISPLAY BRIGHTNESS: increase or decrease the brightness of the touch screen display

(10) PASSCODE

Enables or disables the passcode lock for the configuration menu.
Tap the input field to enter a passcode, and enable the on/off toggle to activate it.
When the passcode is enabled, the lock icon on the main screen will have a red background, and the passcode will be required to access the configuration menu.
Should you forget the passcode, contact Kolver to obtain a master passcode.

(11) DATE & TIME

Tap to change the date and time of the unit. This changes the date and time associated with each (new) result reported in the serial print, usb, and modbus fields.

(12) TOUCH SCREEN CALIBRATION

Tap to enter the touch screen calibration function. Use this to correct problems with the alignment of the touch response of the display.
Touch the four blue dots with one finger where they appear on the screen. Contact Kolver if the problem persists.

(13) INFO

Tap to show the firmware versions loaded onto the unit and onto the connected KDS screwdriver.

(14) COMMUNICATION PROTOCOL

PROTOCOL: select the communication protocol to use between the following options:

K-EXPAND: to interface with the free K-EXPAND PC software via the MiniUSB port.
MODBUS TCP: to interface with any device supporting the MODBUS TCP protocol via the ethernet port.

IP ADDRESS: the ethernet IP address of the K-DUCER unit. Must be assigned manually and be available/reserved in the local network, if applicable. The unit does not support DHCP assignment.
GATEWAY: the ethernet IP address of the local network gateway, if applicable. You can leave this as 0.0.0.0 in most cases.
DNS: the ethernet IP address of the local DNS server. You can leave this as 0.0.0.0 in most cases.
SUBNET MASK: the subnet mask of the local network. The value must match the subnet mask of the other devices in the LAN. Usually this value is 255.255.255.0. Note that 0.0.0.0 will not work in most cases. Contact your IT support if unsure.
MAC ADDRESS: shows the MAC address of the K-DUCER (v35 and later).

Note: to find the MAC address of the K-DUCER unit with firmware versions v34 and earlier: set COMMUNICATION PROTOCOL to OP or MODBUS TCP, then connect to a PC connected to the same LAN network. If connecting CN1 directly to an ethernet port on your PC, make sure to set your PC's IP address to static with the same subnet mask of the K-DUCER.
For example:

K-DUCER IP address:	192.168.1.12
PC IP address (static):	192.168.1.13
SUBNET MASK for both:	255.255.255.0

Then, from your PC, open the windows command prompt, and type the following:
`arp 192.168.1.12 -a`
The response will show the MAC address of the K-DUCER.

Alternatively, contact your Kolver representative to schedule an update to the latest firmware version.

(15) Exit/Save Key

Tap to return to the previous menu and save or discard any changes made.

USB menu

Tap the USB button from the main menu to enter the USB menu.
From this menu you can save and recall the K-DUCER configuration containing all program parameters, sequence parameters, and general settings, from a USB drive connected to the USB type-A port on the bottom of the unit.
Note: use the USB type A port for this function, not the mini-USB port.
Note: the USB drive must be formatted with the FAT32 filesystem.
If there is no USB drive connected, or if the USB drive is not formatted with **FAT32** filesystem, the following screen will appear. Connect a properly formatted USB drive to correct this error.

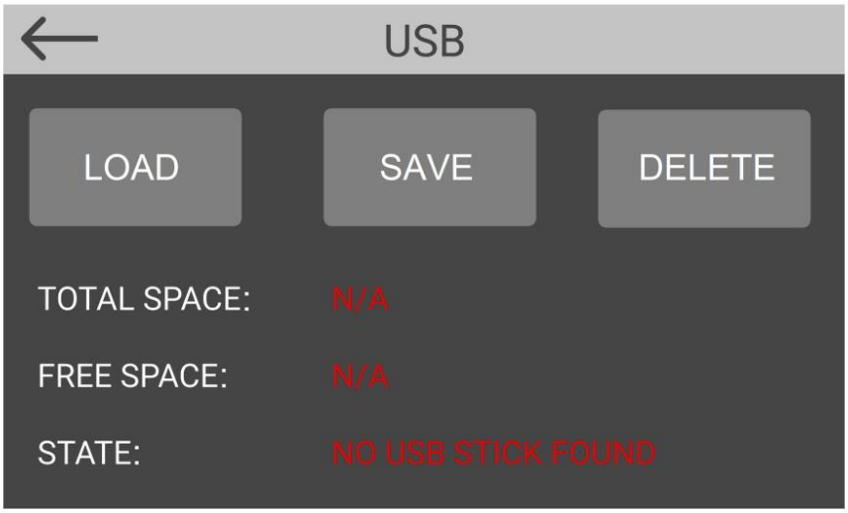

If a properly FAT32-formatted USB key is connected, the load/save/delete buttons will be enabled:

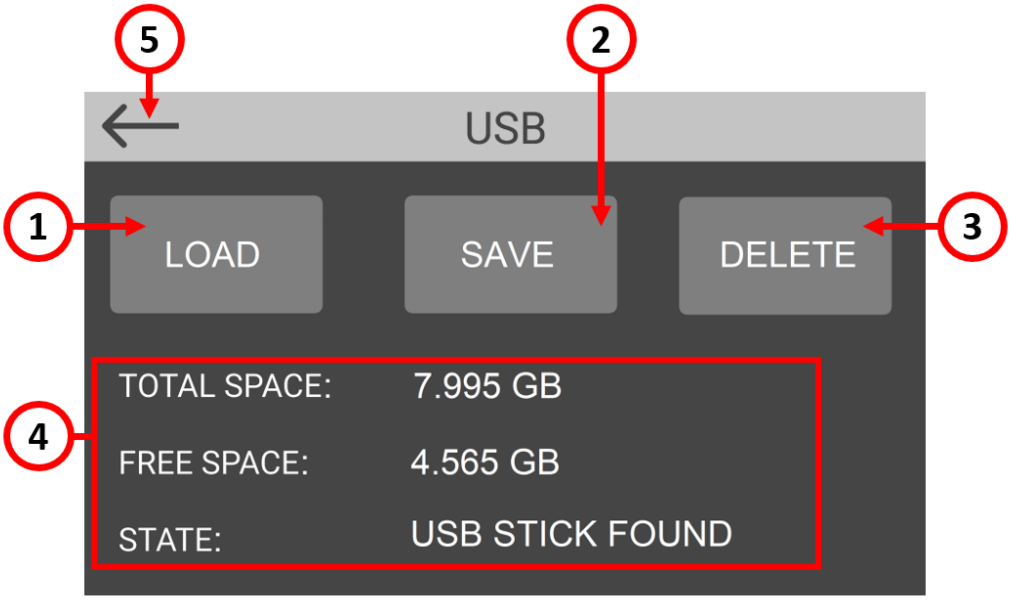

(1) LOAD programs button

Tap to display a list of KDU files found in the root directory of the USB drive. Select the desired KDU file -the selected file will be highlighted in green-, previously saved from a K-DUCER unit or from the freely available K-EXPAND software for PC, then tap load to load the configuration onto the K-DUCER control unit.

(2) SAVE programs button

Tap to save the configuration of the K-DUCER control unit, including all program parameters, all sequence parameters, and all general settings, onto the connected USB drive. You will be prompted to enter a name for the configuration file. The file will have a .kdu extension and can be loaded onto this or other K-DUCER units or onto the freely available K-EXPAND software for PC.

(3) DELETE programs button

Tap to display a list of KDU files found in the root directory of the USB drive. Select a file -the selected file will be highlighted in green- and tap delete to delete it. Tap "Format Drive" to delete all files from the USB drive.

WARNING: all deleted files using the "delete" and "format drive" functions are permanently deleted and unrecoverable.

(4) USB drive information

Shows the total space and available space of the connected USB drive, and whether a properly formatted USB drive is connected to the USB type-A connector on the K-DUCER unit.

Note: the unit can store about 7 million screwdriving results (cycles) for each GB of available space in the USB drive.

(5) Exit button

Tap to exit the USB menu.

USB menu tree

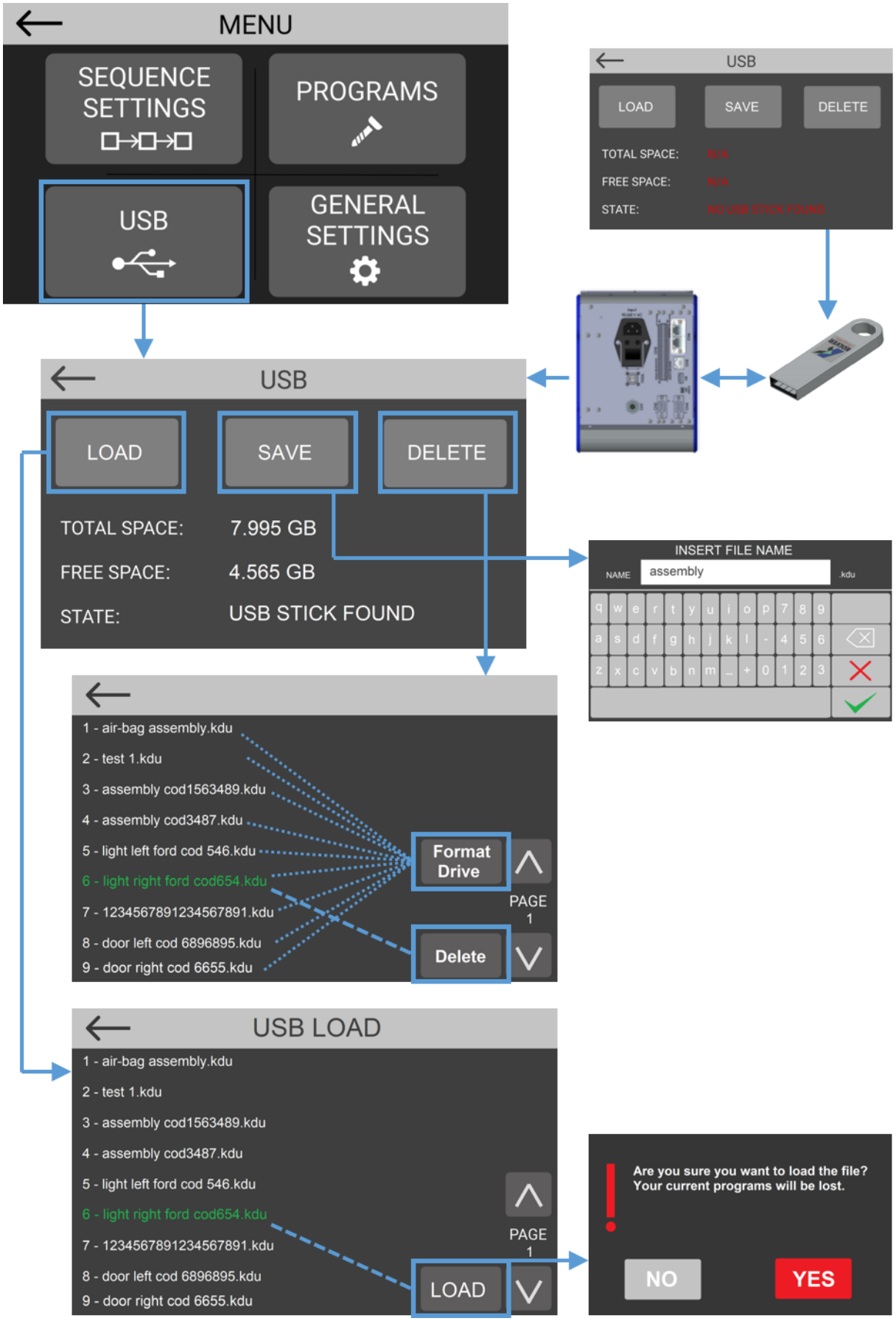

FREE K-EXPAND NT SOFTWARE

Kolver offers two free software packages to accompany the K-DUCER series controllers. To download the software, visit www.kolver.com, select “Industry 4.0 | K-DUCER Series” and click the download buttons on the right side., or contact kolver to obtain the setup files.

K-Expand NT: K-EXPAND is the free software created by Kolver to set, change, and save all parameters of the K-DUCER control unit.
It also offers a terminal to display the screwdriving results as well as torque/angle vs time charts in real time (at the end of each tightening).

K-Link NT: (available for KDU-NT at a later date) K-Link is the free software provided by Kolver to automatically store the tightening results from one or more K-DUCER control units, with no user intervention required. K-Link runs as a hidden background Windows service and starts automatically.

Note: thanks to the simple-yet-powerful Modbus TCP interface, any entry level programmer can create custom scripts to retrieve data and remote-control the K-Ducer from virtually any ethernet-enabled platform. Refer to the “MODBUS TCP code examples and literature” section for more information.

REMOTE CONTROL INTERFACES

The K-DUCER unit supports the following data acquisition and remote-control interfaces to suit your automation and industry 4.0 needs:

- 24V I/O signals (CN5), providing:
  - remote control (START/STOP/REVERSE and program/sequence selection)
  - angle counting start for STARTING AT mode "Ext"
  - binary data acquisition (MOTOR ON/ SCREW OK / SCREW NOK / STOP)

- MODBUS TCP via ethernet port (CN1), providing:
  - remote control (same functionality as 24V I/O except angle counting start)
  - status bits (MOTOR ON/ SCREW OK / SCREW NOK / STOP)
  - full data acquisition of last screwdriving result including torque/angle graphs
  - ability to change any program/sequence/setting parameter

- Open Protocol and ToolsNet Open Protocol support will be available at a later date

- Interface with K-EXPAND software via mini-USB or ethernet port, providing:
  - same functionality available through MODBUS TCP
  - easiest choice for programming of all programs/sequences/settings
  - not recommended for remote control of screwdriver other than testing
  - data acquisition and torque/angle graph visualization

Additionally, a printout of each screwdriving result can be accessed as follows:

- Through serial ports CN4 and CN2, for printing with Kolver printer accessory or receival with any serial terminal, automatically transmitted at the end of each tightening
- On a text file saved to a thumb drive connected to the USB type A port (the larger USB port), automatically generated and saved at the end of each tightening
- From a server or PC with a python script provided by Kolver (CN1 via ModBus)
- See Retrieving and storing the screwdriving results section

24V I/O

Introduction

The 24V signals allow start/stop control of the screwdriver, program selection, sequence selection, error detection and clearing, and more.
The advantage of this system is the simplicity of the control, but its disadvantages are:

- Data acquisition capability is limited to OK / NOK. Torque and angle values cannot be read via these I/O signals.
- The 24V signals are susceptible to being disturbed by electromagnetic interference (EMI), especially in the highly noisy electrical environments often found in assembly lines. Kolver recommends using shielded wires with grounded shields and ferrite beads to limit EMI.

For these reasons, Kolver recommends using the more robust ethernet port with MODBUS TCP whenever possible.

The I/O controls available via CN5 are:

- [I] Actuate the screwdriver motor in tightening direction (START)
- [I] Actuate the screwdriver motor in de-tightening direction (REVERSE)
- [I] Lock/disable the screwdriver (STOP)
- [I] Angle counting start
- [O] OK result
- [O] NOK result
- [O] Screwdriver motor status
- [O] STOP motor status

The voltage for both inputs and outputs must be brought in externally via the corresponding positive and ground terminals.

Pinout (CN5)

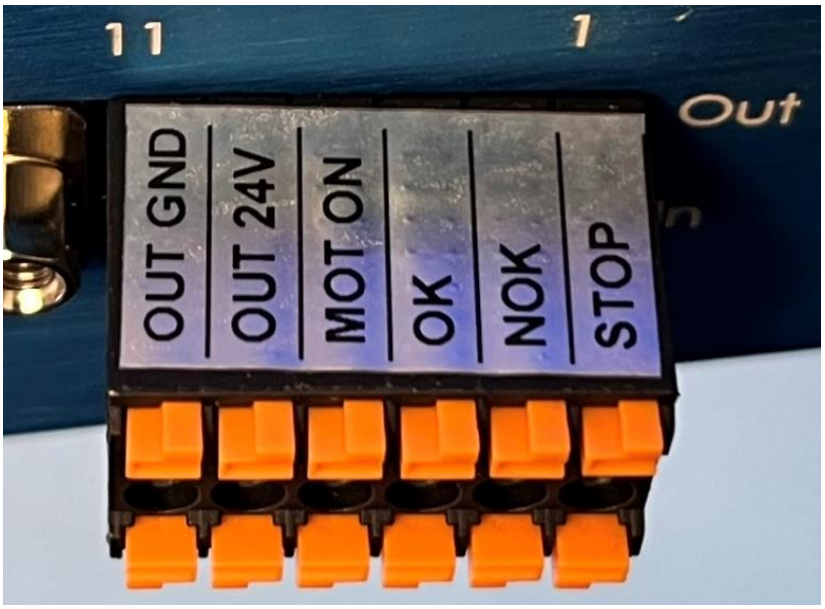

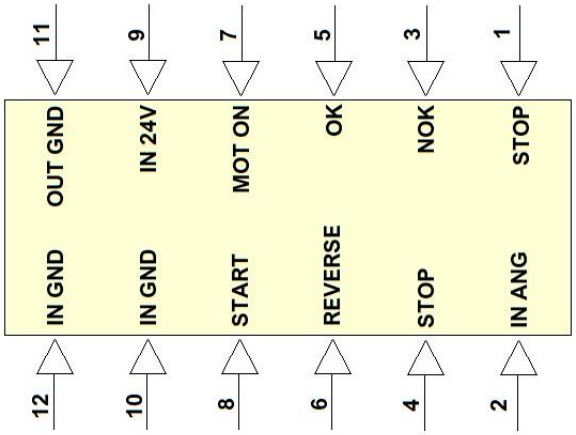

CN3 Connector
Dinkle model:
0159-0312

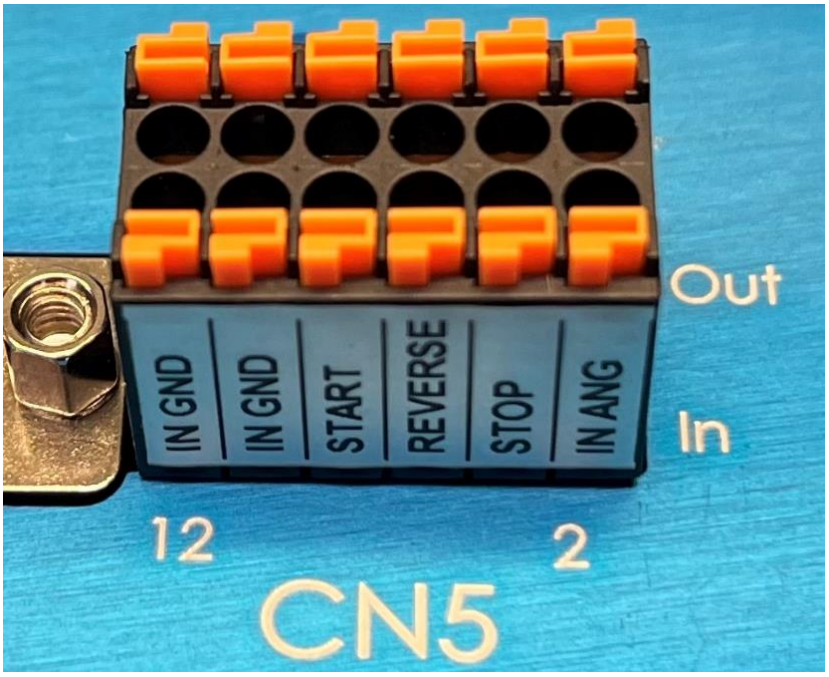

To connect, simply push the cable or the ferrule directly onto the corresponding hole.
To disconnect the cables, press lightly on the respective orange plate.

Solid cable section min (mm²) 0.2
Solid cable section max (mm²) 0.5
Section of braided cable min (mm²) 0.2
Section of braided cable max (mm²) 0.5
Flexible cable section with min ferrule without sheath (mm²) 0.25
Flexible cable section with max ferrule without sheath (mm²) 0.75
Flexible cable section with min ferrule with sheath (mm²) 0.25
Flexible cable section with max ferrule with sheath (mm²) 0.5

Note: you must supply a 24 VDC power source to Pin 9 to drive output signals 1-3-5-7, with grounding reference to Pin 11:

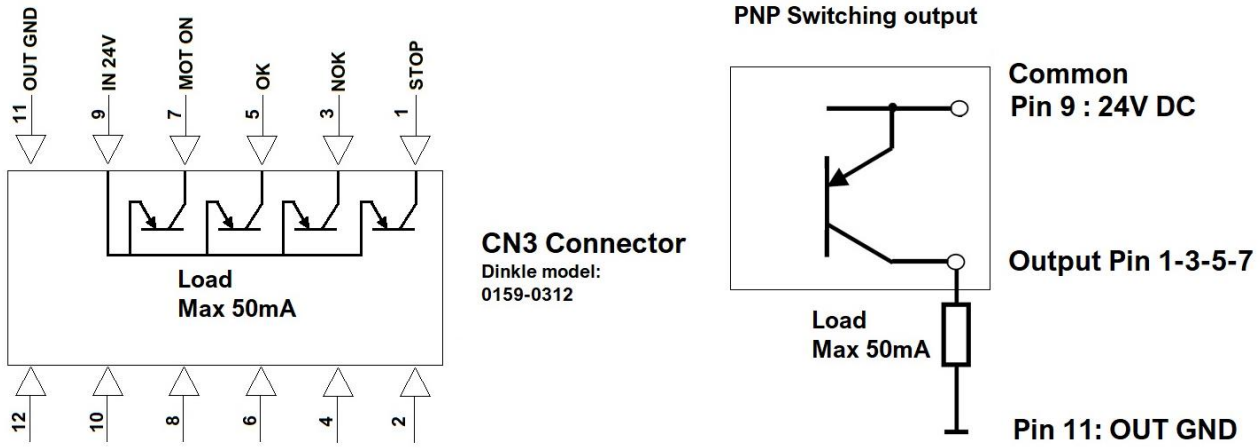

The input signals 2-4-6-8 require PNP logic: supply 24 VDC with respect to the grounding reference on Pin 10 to enable the corresponding function.

INPUT SIDE **The input signals 2-4-6-8 require PNP logic: supply 24 VDC with respect to the grounding reference on Pin 10 to enable the corresponding function.** When driving the inputs via an automated machine or PLC, it is recommended to program a delay of at least 30ms between each change of input signals.		
PIN	**NAME**	**FUNCTION**
2	START	Remote motor start. This pin serves the same function as the physical lever on the screwdriver. Activating it initiates the screwdriver motor. The signal must be maintained active for the motor to continue running. The motor will continue running until this signal is removed or until the tightening completes according to the current program parameters (for example, when reaching torque). As soon as the tightening completes, the screwdriver motor stops and this signal will be ignored until it is pulled down (for a recommended minimum of 30ms).
4	REVERSE	Remote motor reverse start. This pin serves the same function as the physical reverse button on the screwdriver. The behavior of the reverse button can be configured via General Settings > REVERSE BUTTON.
6	STOP MOTOR	Remote motor stop. When active, the screwdriver stops running and remains disabled. The message “STOP MOTOR ON” appears on the display. This signal disables the screwdriver and is prioritized over any other signal: START and REVERSE signals as well as the physical lever on the screwdriver will be ignored when STOP MOTOR is active.
8	IN ANG	Input signal to initiate the angle measurement during a tightening , when using the external signal setting for angle measurement. See PROGRAM menu > TORQUE & ANGLE > STARTING AT for more details.
10	GND	Grounding reference for the power supply required to drive the inputs

OUTPUT SIDE

The output signals must be driven by a +24VDC potential supplied to pin 9 with grounding on pin 11.
The output signals NOK and OK remain active until the screwdriver changes state again, for example, when the operator or the PLC initiates another tightening.

PIN	NAME	FUNCTION
1	STOP	This signal is active when the screwdriver is in STOP MOTOR state. Note that entering the configuration menu on the touch screen puts the screwdriver in the STOP MOTOR state.
3	NOK	(Not-OK) This signal activates when the tightening (screw) completes unsuccessfully, outside of the parameters set for the current program, for example: torque reached under minimum time, torque reached outside angle bounds, etc. This signal remains active until the screwdriver changes state again, for example, when the operator or the PLC initiates another tightening.
5	OK	This signal activates when the tightening (screw) completes successfully and within the parameters set for the current program. This signal remains active until the screwdriver changes state again, for example, when the operator or the PLC initiates another tightening.
7	MOTOR ON (/W)	It activates when the screwdriver is tightening. Note: this signal does not activate when the screwdriver is reversing, it is intended for use with auto-advancing fixtures and arms.
9	24V OUT	Supply 24VDC power to this pin to drive the output signals
11	GND	Grounding reference for the power supply required to drive the outputs

MODBUS TCP

Note: the full K-DUCER MODBUS Map along with several code examples, guides, and literature can be found at: at https://kolverusa.com/products-list/16-Industry-40-KDUCER-Series

Introduction

The recommended way to interface with the K-DUCER unit is through the MODBUS TCP protocol on the ethernet port (CN5).
MODBUS communication protocol provides a Client-Server interface between devices connected on an ethernet TCP/IP network.
The MODBUS protocol specifications are open source and freely available online at modbus.org, however most automation engineers will not need to worry about the implementation details because MODBUS is already supported and implemented by most ethernet-capable PLCs and industrial PCs.

Usage

Enable MODBUS TCP via the General Settings menu > COMMUNICATION PROTOCOL.
The K-DUCER should be connected to the same LAN network as the controlling device, and it must be left in the main operation screen, outside of any configuration menu.
Note: the K-DUCER will respond to the *ping* command over TCP/IP when configured correctly.

The K-DUCER implements a MODBUS server, which responds to MODBUS requests.
The automation device (PLC, industrial PC, …) must implement a MODBUS client, which sends MODBUS requests to the server (K-DUCER).

The MODBUS server (K-DUCER) only responds to requests and never initiates any communication independently, in accordance with the MODBUS protocol.
A MODBUS request is simply a message requesting to read or write one or more *bits* or *bytes* of data at a particular address. The list of all accessible data and their addresses is called the MODBUS map.

MODBUS requests are categorized into *function codes*. Different function codes are used to access different types of data (bits-coils or byes-registers). There are also convenience function codes used to access a range of multiple data addresses at once.

All program, sequence, and general settings can be modified via MODBUS requests. However, Kolver recommends pre-configuring the K-DUCER programs and settings via the K-Expand software, via touch screen, or via kdu backup file from USB, and only

utilizing the MODBUS TCP protocol for screwdriver control, program switching, and data acquisition.

Changing program parameters such as target torque via MODBUS is possible, but it shouldn't be necessary except for the rare applications requiring more than 64 different programs.

K-DUCER MODBUS map

The K-DUCER, MODBUS data is organized and accessed as follows:

Data Category	Contents	Access	Associated MODBUS function codes
COILS (*bits*)	A mirror copy of the CN5 output pins represented as bits; Writeable coils mimicking the functionality of CN5 input pins, providing screwdriver motor control capability	Read/ Write	01 (read coils) 05 (write single coil) 15 (write multiple coils)
INPUT REGISTERS (*bytes*)	Data related to the last screwdriving results including closing torque and angle; torque/angle charts; current screwdriving state and errors; connected screwdriver info	Read only	04 (read input registers)
HOLDING REGISTERS (*bytes*)	Current selected program; Remote programming mode enter/exit flag; All program settings; All sequence setting; Current selected sequence; All options settings. Barcode	Read/ Write*	03 (read holding registers) 06 (write single register) 16 (write multiple registers)
DISCRETE INPUTS	A mirror copy of the CN5 input pins represented as bits	Read only	

Note: the holding registers contain all program, sequence, and option settings. It is possible but not recommended to change these parameters via MODBUS. Make sure to follow the MODBUS map and to format all write data accordingly.

The full MODBUS map can be found at https://kolverusa.com/products-list/16-Industry-40-KDUCER-Series

MODBUS TCP code examples and literature

We provide sample projects illustrating K-DUCER screwdriver control built by Kolver for various devices, as well as generic MODBUS TCP guides and literature produced by the manufacturers of these devices at https://kolverusa.com/products-list/16-Industry-40-KDUCER-Series

The packet also contains open source scripts to retrieve and store the K-Ducer screwdriving results, written in PowerShell, Python, and C#, that can be used as provided or as a starting point for in-house software development.

We also recommend searching youtube for a multitude of freely available videos illustrating how to implement MODBUS TCP communication with various PLC and industrial PC control systems.

Anybus, Rockwell, Allen Bradley, MicroPLC, ControlLogix, CompactLogix, Siemens, SIMATIC, Universal Robots, PolyScope, are all trademarks of their respective corporations and are not affiliated with Kolver.

PROFINET / Ethernet IP / EtherCAT / others

Most PLCs are capable of communication via MODBUS TCP and come with ready-to-use MODBUS TCP libraries.
Kolver provides example projects for remote control and data acquisition of the K-DUCER via MODBUS TCP for Siemens (S7-1200) and AllenBradley (Micro800 series) PLCs.
For those customers requiring or preferring to communicate or control the K-DUCER directly using other communication protocols such as PROFINET, Ethernet IP, or EtherCAT, Kolver recommends purchasing a protocol converter such as ADFWeb protocol converters , Anybus x-gateway converters, or similar devices.

Kolver can provide support in configuring these products.

ADFWeb, Anybus, Rockwell, Allen Bradley, MicroPLC, ControlLogix, CompactLogix, Siemens, SIMATIC, Universal Robots, PolyScope, are all trademarks of their respective corporations and are not affiliated with Kolver.

MAINTENANCE AND CARE

INTRODUCTION

K-DUCER and KDS screwdrivers are precision tools. While built to withstand heavy use in industrial environments, good care and proper maintenance will go a long way in ensuring the best performance and lifetime of your instrument.

Make sure to follow the INSTALLATION instructions for the K-DUCER, KDS screwdriver, and the reaction arm.

The most important factor in ensuring long-lasting performance and lifetime of the instrument is to configure it properly for the job required. Read this manual carefully to ensure the tool is optimally configured for your application.

Some factors that can overwork and overheat the screwdriver include:

- Combination of high torque and low speed on very elastic joints (note that the screwdriver delivers high torques more efficiently at higher speeds)
- Very high duty cycles (< 3 seconds between tightenings), depending on the difficulty (torque, elasticity, speed) of the tightening
- High torques are defined as above 80% of the maximum nominal torque for the KDS screwdriver model. Consider upsizing to a higher-torque screwdriver model if most of your cycles are above 80% of the maximum nominal torque.

CALIBRATION

Recommended calibration interval: every 1,000,000 cycles. See TOOL INFO to check the number of cycles of your KDS screwdriver.

Kolver supplies all KDS series screwdrivers with the transducer pre-calibrated on a semi-elastic joint at a final speed of 100RPM (KDS models 15Nm and smaller) or 50RPM (KDS models 20Nm and larger). The calibration settings are unique to each KDS screwdriver and saved on the KDS screwdriver board.

Contact your Kolver representative to schedule a maintenance and calibration service with Kolver or through one of our ISO/NIST certified lab partners.
Alternatively, Kolver can provide calibration instructions for you to perform the calibration in-house.

MAINTENANCE

Recommended maintenance interval: every 500,000 cycles or 12 months, whichever comes first. See TOOL INFO to check the number of cycles of your KDS screwdriver.

Maintenance consists of disassembling the screwdriver to clean and relubricate the gearbox, and checking the calibration of the screwdriver against a certified torque measurement tool. Contact your Kolver representative to schedule a maintenance service. Alternatively, Kolver can provide maintenance instructions.

EXPLODED VIEWS AND SPARE PARTS:

EXPLODED VIEW KDU-NT:

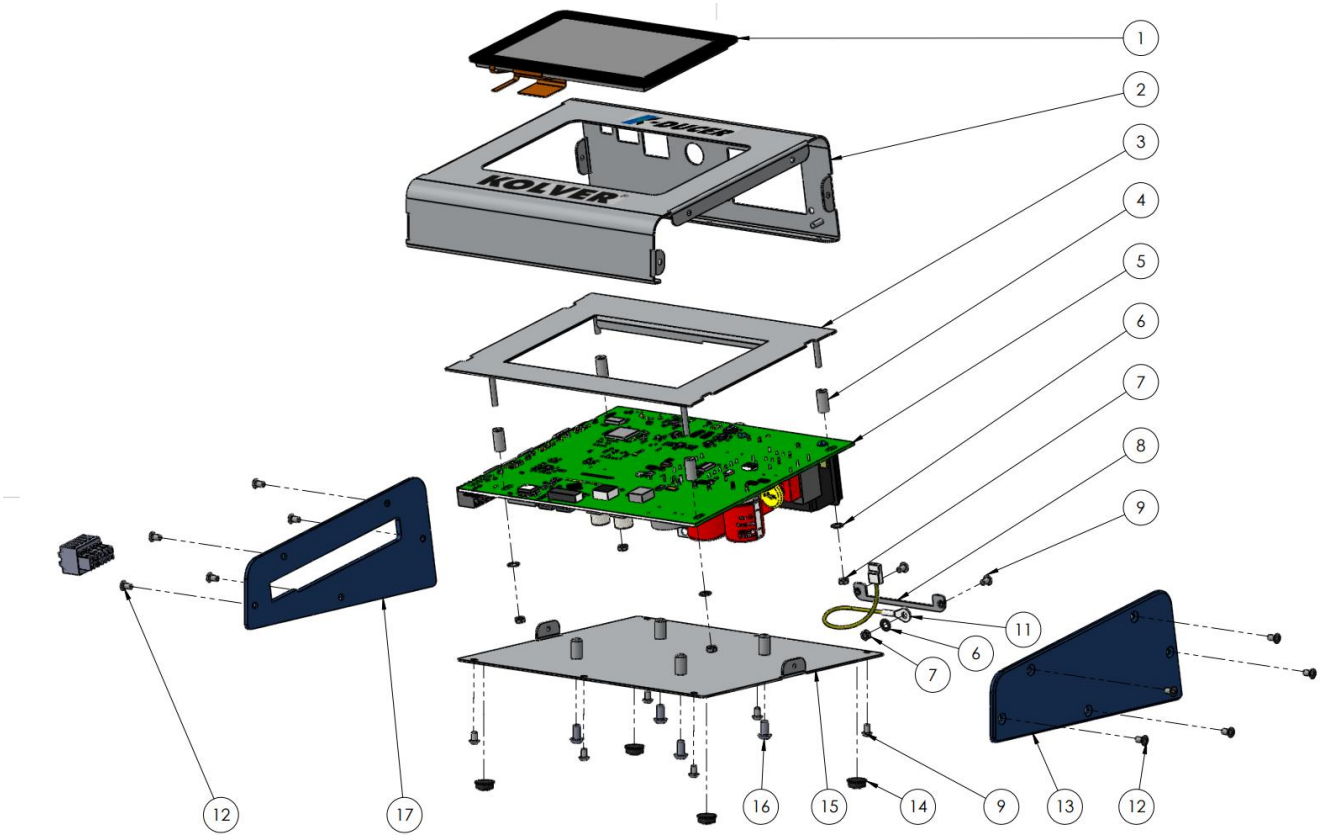

SPARE PARTS KDU-NT:

Position	Description	Quantity	Part Number
1	SPACER 22MM KDU	4	872522
2	MOTOR BOARD K-DUCER	1	852530
3	I/O BOARD (44 PIN CONNECTOR) - KDU	1	852533/B
4	SWITCHING	1	872490
5	SCREW M4X8 ZN TX20	4	872534
6	SIDE PLATE	1	872504
7	SUPPORT SWITCHING PLATE KDU	1	872505
8	FERRITE RKCF-08-A5	1	872468
9	BOARDS SEAT	1	872503/A
10	FERRITE SCREWDRIVER CONNECTOR	2	872523
11	SCREW M3X10 ZN TX10	6	231530
12	FILTER AR13.6 A	1	800718
13	ANTI-UNTHREAD PLUGS	1	800719
14	FUSE 3,15A F-520LT3.15	2	800619
15	SCREW TSP M3X8 TX10 ZN	16	801009
16	CONNECTOR I/O 44PIN	1	872526
17	SCREW M3 X 5 ZN TX10	18	872444
18	CONNECTOR M12 8 POLI FEMALE	1	872537
19	CONNECTOR M16 10 PIN FEMALE	1	201668/HU
20	FLAT CABLE 4 PIN	1	872539
21	SUPPORT MOTOR BOARD	6	872442
22	ANYBUS	1	872521
23	I/O (MICRO) BOARD	1	852533/A
24	FRONT PANEL	1	872502
25	LEFT SIDE KDU	1	872500
26	RIGHT SIDE KDU	1	872501
27	FLAT CABLE 8 PIN + FERRITE	1	872540
28	FTDI DISPLAY TOUCH BOARD	1	852529
29	DISPLAY TOUCH 5" DLC0500HZR-T-17	1	852532
30	GROUND CABLE	1	800090/E
31	WASHER M3	3	800041
32	M3 BRUSSER NUT	3	800056/O
33	SCREW M2,5X8 ZN TX10	4	872478
34	RUBBER SUPPORT	2	800016
35	GASKET	2	872524
	LABEL	1	818006/SW
	CABLE 3x0,75 H05VVF 2mt. SCHUKO	1	800620

EXPLODED VIEW KDS-NT70 – KDS-NT70/HM:

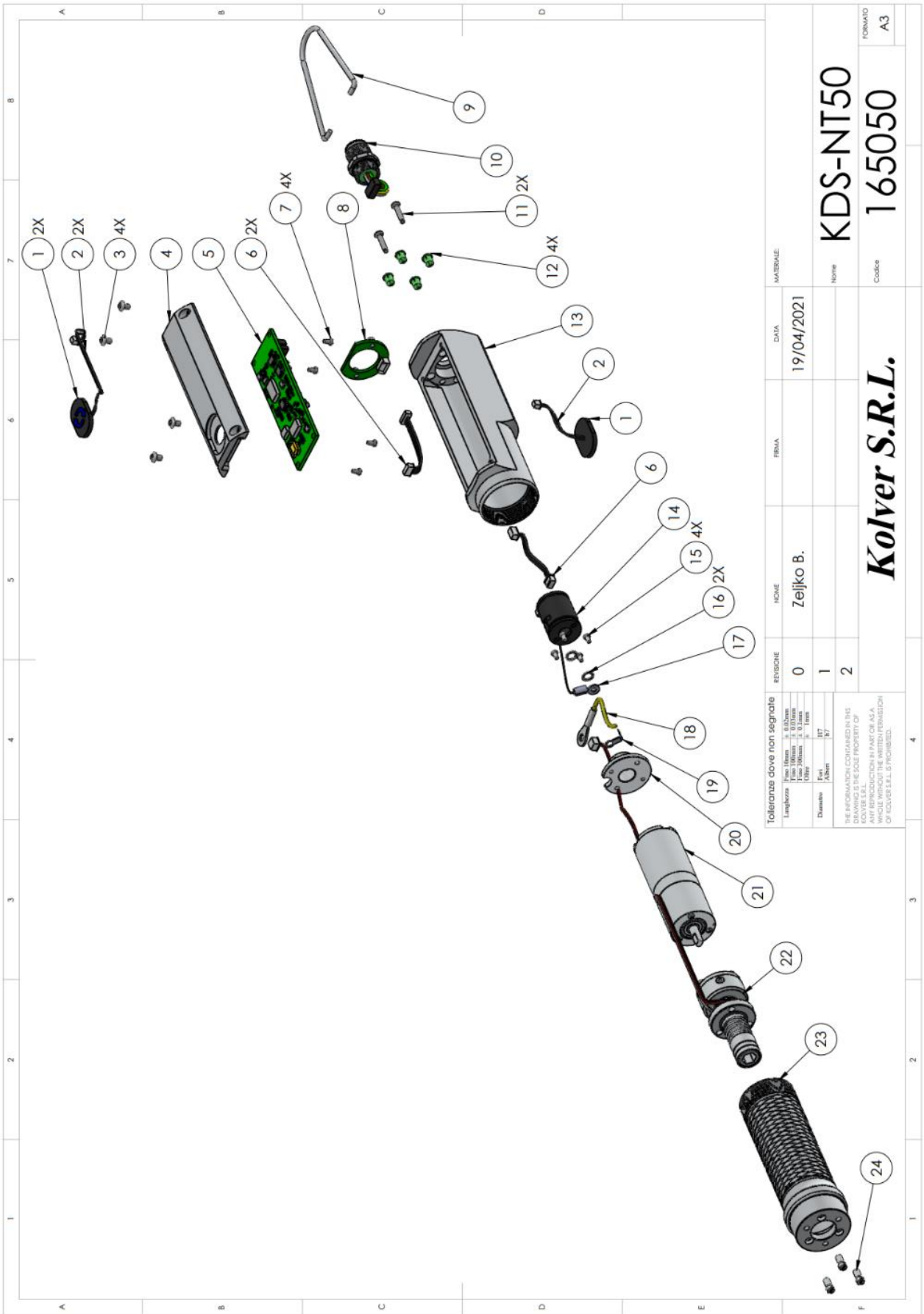

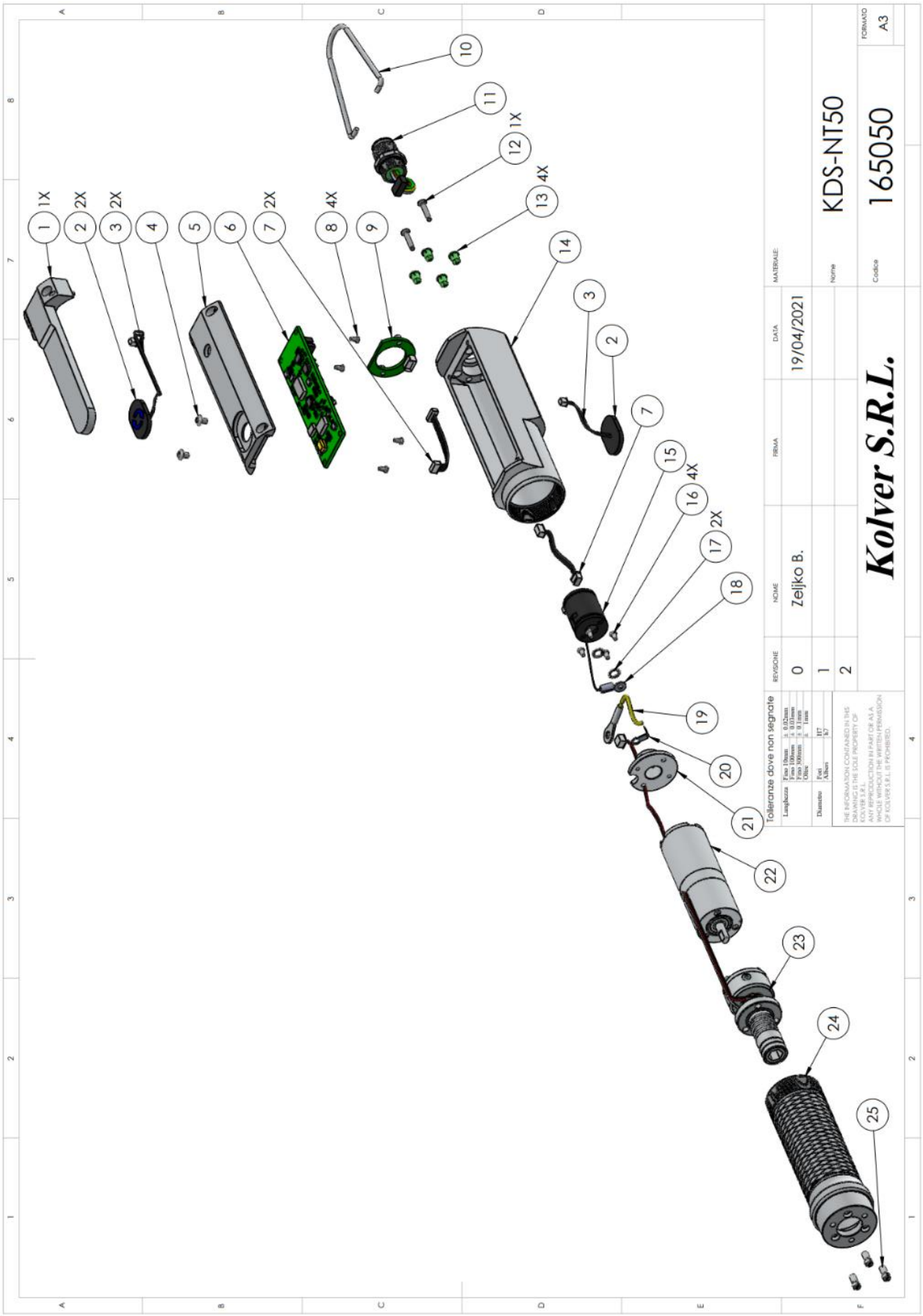
1X
2X
2X
2X
4X
1X
4X
2X
Tolleranze dove non segnate
REVISIONE
NOME
FIRMA
DATA
MATERIALE:
0
Zeljko B.
19/04/2021
1
2
Kolver S.R.L.
Nome
KDS-NT50
Codice
165050
FORMATO
A3

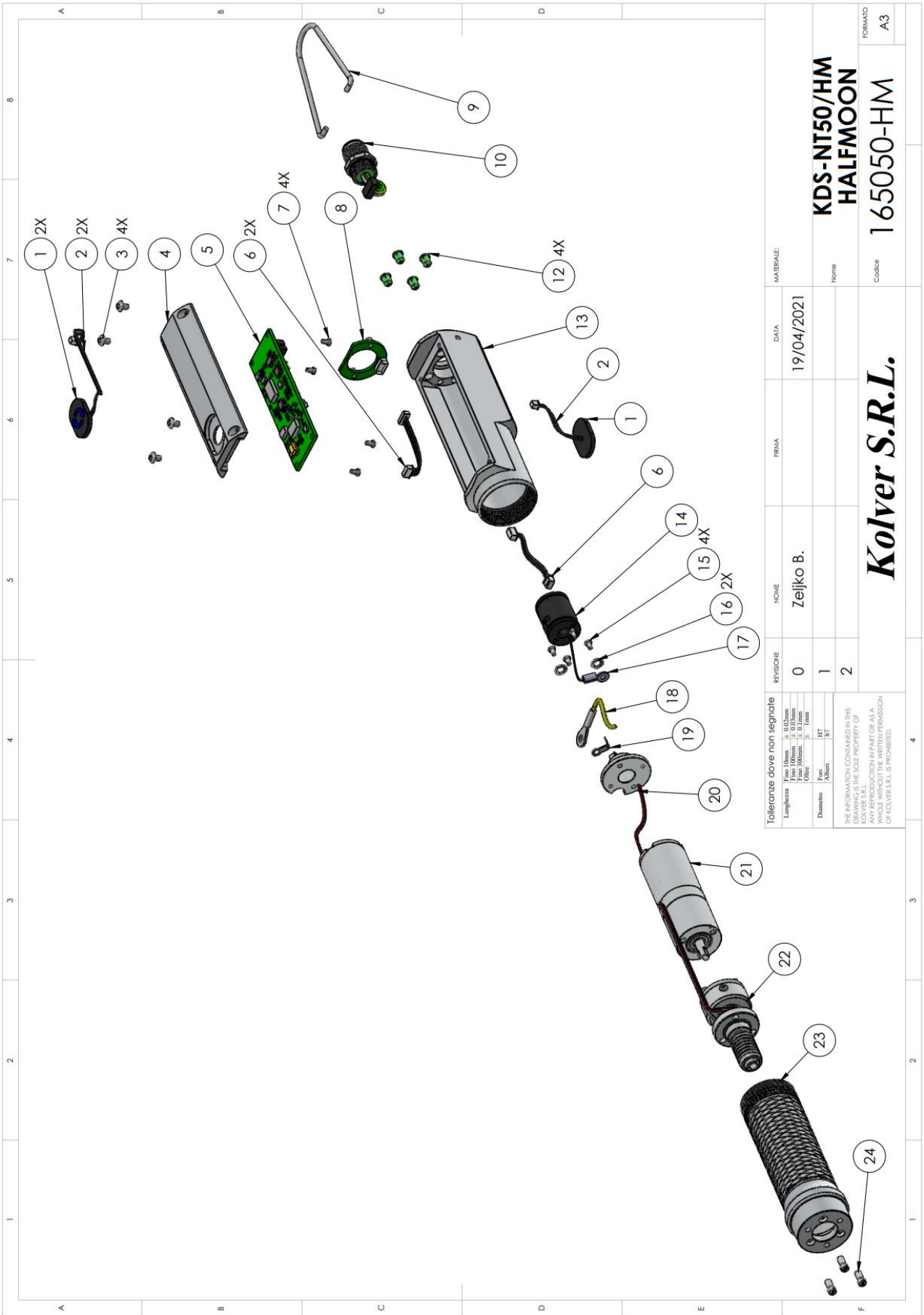
KDS-NT50/HM
HALFMOON
165050-HM
Kolver S.R.L.
Zeljko B.
19/04/2021
A3

SPARE PARTS KDS-NT70 – KDS-NT70/HM:

NUM. ARTICOLO	DESCRIZIONE	CODICE	QUANTITÀ
1	PULSANTE REVERSE KDS NT	231535/NT	2
2	PICOBLADE DOPPIO 2P PER REVERSE KDS 50MM	231559	2
3	BN6404 M2,5X4 TX8	872487	4
4	COPERCHIO KDS NT	250203	1
5	SCHEDA KDS-NT	852540	1
6	PICOBLADE DOPPIO 4P PER LED KDS NT 50MM	231565	2
7	BN3334 VITE M2X4	801004	4
8	SCHEDA LED AVVITATORE KDS NT	852541	1
9	GANCIO	200060	1
10	CONNETTORE M12 8PIN	201766/NT	1
11	BN2041 2,2X12 SVASATA LED PER KDS NT	872489	2
12	GUIDA LED PLW5-5mm FOR KDS-XX/D	231553	4
13	CORPO AVVITATORE KDS NT	250202	1
14	ENCODER ME16-160-2.000-2-LS KDS NT50	250041/3	1
15	801004 VITE M2X4D	801004	4
16	801005 BN 781 RONDELLA DENT. M2/2,2 X PL/TA	801005	2
17	SENSORE TEMPERATURA TRASDUTTORE	231534	1
18	CAVO TERRA	231546/PN	1
19	LAMELLA TERRA	200084	1
20	STAFFA ENCODER PWB ME16 PER DCX22 250132-T PER KDU NT	250132	1
21	MOTORIDUTTORE NATO50	231512/05	1
22	KIT ALBERO KDSNT 50 250047-THM-KIT	250047/THM/KIT	1
23	CANNOTTO PORTAMOTORE KDS NT	250201	1
24	BN404 VITE TAGLIO M3X8 TESTA RIDOTTA	801008	3

Lever Kit:

1	KIT LEVA KDS NT	10450	1

/HM Half-Moon model:

23	KIT ALBERO KDS NT50	250047/T/KIT	

EXPLODED VIEW KDS-NT70CA – KDS-NT70CA/HM:

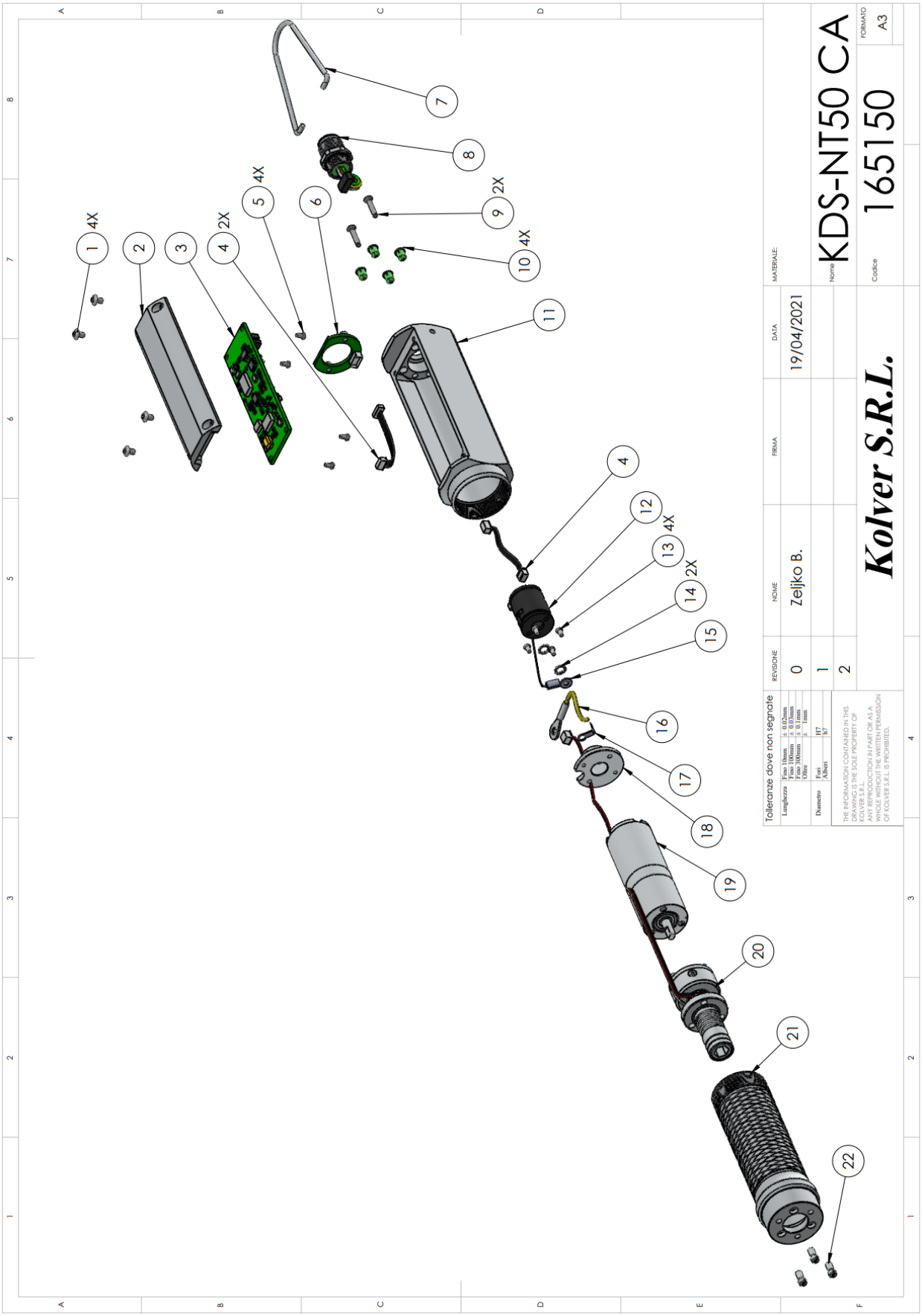

SPARE PARTS KDS-NT70 – KDS-NT70/HM:

NUM. ARTICOLO	DESCRIZIONE	CODICE	QUANTITÀ
1	BN6404 M2,5X4 TX8	872487	4
2	Coperchio KDS NT 250203-CA senza tasto	250203-CA	1
3	SCHEDA KDS-NT	852540	1
4	PICOBLADE DOPPIO 4P PER LED KDS NT 50MM	231565	2
5	BN3334 VITE M2X4	801004	4
6	SCHEDA LED AVVITATORE KDS NT	852541	1
7	GANCIO	200060	1
8	CONNETTORE M12 8PIN	201766/NT	1
9	BN2041 2,2X15 SVASATA LED PER KDS NT	872489	2
10	GUIDA LED PLW5-5mm FOR KDS-XX/D	231553	4
11	CORPO AVVITATORE KDS NT	250202	1
12	ENCODER ME16-160-2.000-2-LS KDS NT50	250041/3	1
13	801004 VITE M2X4D	801004	4
14	801005 BN 781 RONDELLA DENT. M2/2,2 X PL/TA	801005	2
15	SENSORE TEMPERATURA TRASDUTTORE	231534	1
16	CAVO TERRA	231546/PN	1
17	LAMELLA TERRA	200084	1
18	STAFFA ENCODER PWB ME16 PER DCX22 250132-T PER KDU NT	250132	1
19	MOTORIDUTTORE NATO50	231512/05	1
20	KIT ALBERO KDS NT50	250047/T/KIT	
21	CANNOTTO PORTAMOTORE KDS NT	250201	1
22	BN404 VITE TAGLIO M3X8 TESTA RIDOTTA	801008	3

GUARANTEE

This KOLVER product is guaranteed against defective workmanship or materials, for a maximum period of 12 months following the date of purchase from KOLVER, provided that its usage is limited to single shift operation throughout that period. If the usage rate exceeds of single shift operation, the guarantee period shall be reduced on a prorata basis.
If, during the guarantee period, the product appears to be defective in workmanship or materials, it should be returned to KOLVER or its distributors, transport prepaied, together with a short description of the alleged defect. KOLVER shall, at its sole discretion, arrange to repair or replace free of charge such items.
This guarantee does not cover repair or replacement required as a consequence of products which have been abused, misused or modified, or which have been repaired using not original KOLVER spare parts or by not authorized service personnel.
KOLVER accepts no claim for labour or other expenditure made upon defective products. Any direct, incidental or consequential damages whatsoever arising from any defect are expressly excluded.
This guarantee replaces all other guarantees, or conditions, expressed or implied, regarding the quality, the marketability or the fitness for any particular purpose.
No one, whether an agent, servant or employee of KOLVER, is authorized to add to or modify the terms of this limited guarantee in any way. However it's possible to extend the warranty with an extra cost. Further information at kolver@kolver.it.